Installation and service instructions

for contractors

Vitodens 100-W
Type WB1C, 6.5 to 35.0 kW
Wall mounted gas condensing boiler
Natural gas and LPG version
Gas Council no.: 41-819-26 - 29, 47-819-20 - 22

For applicability, see the last page

VITODENS 100-W

5609 059 GB 5/2013

Please keep safe.

Safety instructions

Please follow these safety instructions closely to prevent accidents and material losses.

Safety instructions explained

Danger
This symbol warns against the risk of injury.

Please note
This symbol warns against the risk of material losses and environmental pollution.

Note
Details identified by the word "Note" contain additional information.

Target group

These instructions are exclusively designed for qualified personnel.
- Work on gas equipment must only be carried out by a qualified gas fitter.
- Work on electrical equipment must only be carried out by a qualified electrician.
- The system must be commissioned by the system installer or a qualified person authorised by the installer.

Regulations

Observe the following when working on this system
- all legal instructions regarding the prevention of accidents,
- all legal instructions regarding environmental protection,
- the Code of Practice of relevant trade associations,
- all current safety regulations as defined by DIN, EN, DVGW, TRGI, TRF, VDE and all locally applicable standards,
- Gas Safety (Installation & Use) Regulations
  - the appropriate Building Regulation either the Building regulations, the Building Regulation (Scotland), Building Regulations (Northern Ireland),
  - the Water Fittings Regulation or Water Bylaws in Scotland,
  - the current I.E.E. Wiring Regulations.

If you smell gas

Danger
Escaping gas can lead to explosions which may result in serious injury.
- Never smoke. Prevent naked flames and sparks. Never switch lights or electrical appliances ON or OFF.
- Close the gas shut-off valve.
- Open windows and doors.
- Remove all people from the danger zone.
- Notify your gas or electricity supplier from outside the building.
- Shut off the electricity supply to the building from a safe place (outside the building).

Safety instructions (cont.)

If you smell flue gas

Danger
Flue gas can lead to life-threatening poisoning.
- Shut down the heating system.
- Ventilate the boiler room.
- Close all doors leading to the living space.

Working on the system

- When using gas as fuel, also close the main gas shut-off valve and safeguard against unauthorised reopening.
- Isolate the system from the power supply and check that it is no longer 'live', e.g. by removing a separate fuse or by means of a main isolator.
- Safeguard the system against unauthorised reconnection.

Please note
Electronic modules can be damaged by electro-static discharges.
Touch earthed objects, such as heating or water pipes, to discharge static loads.

Repair work

Please note
Repairing components which fulfil a safety function can compromise the safe operation of your heating system.
Replace faulty components only with original Viessmann spare parts.

Ancillary components, spare and wearing parts

Please note
Spare and wearing parts which have not been tested together with the heating system can compromise its function. Installing non-authorised components and non-approved modifications/conversion can compromise safety and may invalidate our warranty. For replacements, use only original spare parts from Viessmann or those which are approved by Viessmann.

Index

Installation instructions

Product information 6

Preparing for installation 8

Installation sequence
Fitting the boiler and making connections 12
Opening the control unit casing 18
Electrical connections 19

Service instructions

Commissioning, inspection, maintenance
Steps - commissioning, inspection and maintenance 25
Further details regarding the individual steps 26

Troubleshooting
Function sequence and possible faults 46
Fault messages on the display 47
Repairs 51

Gas type conversion
Converting from LPG to natural gas 61

Control unit
Functions and operating conditions in weather-compensated mode 63

Designs
Connection and wiring diagram 64

Parts lists
Ordering parts 66
Overview of the assemblies 67
Sheet metal parts assembly 68
Heat cell assembly 69
Burner assembly 70
Hydraulic assembly 72
System boiler hydraulic assembly 74
Combi hydraulic assembly 76
Control unit assembly 77
Miscellaneous assembly 79

Specification 80

5609 059 GB

Index (cont.)

Certificates
Declaration of conformity..... 82

Keyword index..... 83

Product information

Vitodens 100-W, type WB1C

Preset for operation with natural gas. Conversion to LPG P requires a gas conversion kit.

Gas-Council-Nr.:
- 19 kW system: 41-819-26
- 26 kW system: 41-819-27
- 30 kW system: 41-819-28
- 35 kW system: 41-819-29
- 26 kW combi: 47-819-20
- 30 kW combi: 47-819-21
- 35 kW combi: 47-819-22

Conversion for other countries

The Vitodens 100-W should generally only be delivered to those countries specified on the type plate. For deliveries to alternative countries, an approved contractor must arrange individual approval on his own initiative and in accordance with the law of the country in question.

Product description

The Vitodens 100-W is available as a gas condensing boiler for the connection of one DHW cylinder and as a gas condensing combi boiler with an integral plate heat exchanger for DHW heating.
For the connection of heating circuits and the DHW cylinder or the DHW line, see from page 11.
In the delivered condition, the Vitodens 100-W is set up for operation with constant boiler water temperature. By connecting an outside temperature sensor (accessory), the boiler can be operated in weather-compensated mode.

The following are integrated: one sealed unvented hydraulic system with 2 connections for heating flow and return, and 2 connections for cylinder heating (gas condensing boiler) or DHW heating (gas condensing combi boiler).
These boilers are only intended for installation in sealed unvented heating systems. Boilers for open vented heating systems are also available.
If the Vitodens 100-W is installed in an S plan or Y plan system, the DHW primary connections are not used and must be capped off.

The following components are integrated into the hydraulic system:
- Circulation pump
- 3-way diverter valve
- Safety valve
- Diaphragm expansion vessel
- Plate heat exchanger for DHW heating (gas condensing combi boiler)

DHW heating with DHW cylinder

If a Viessmann Vitocell is connected, a cylinder temperature sensor will issue the heat demand (accessory). The cylinder temperature sensor is connected to the boiler control unit. A 230 V cylinder temperature controller is not required.
If a different DHW cylinder is connected, the cylinder temperature sensor (accessory) may also be used on this cylinder. Alternatively, a 230 V cylinder temperature controller should be connected via the cylinder demand junction box (part of the boiler standard delivery).

5609 059 GB

Product information (cont.)

Accessory connection

Cylinder temperature sensor, outside temperature sensor and time switch are connected to the control unit with low voltage.

Preparing for installation

Preparing for the boiler installation

Dimensions and connections

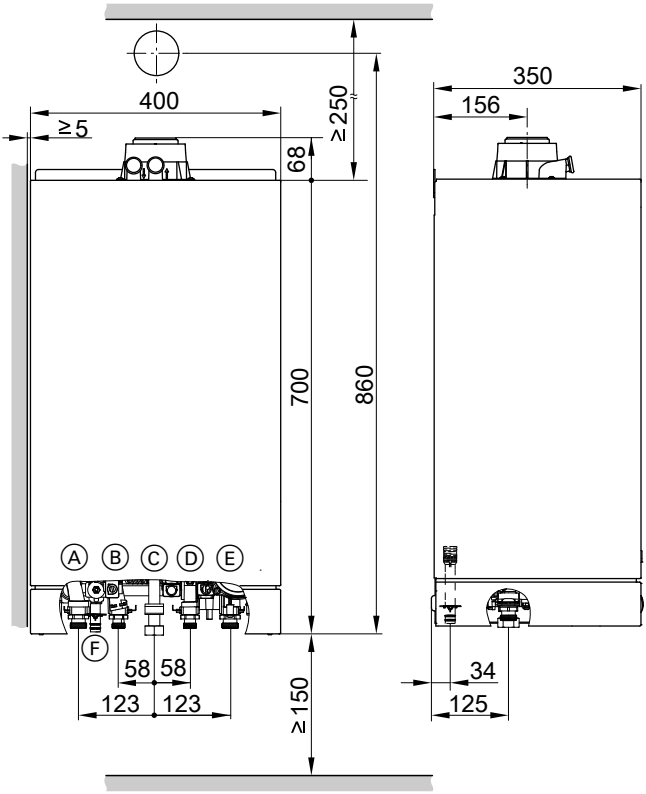

Ⓐ Heating flow
Ⓑ Gas condensing boiler: Cylinder flow
Gas condensing combi boiler: DHW
Ⓒ Gas connection
Ⓓ Gas condensing boiler: Cylinder return
Gas condensing combi boiler: Cold water
Ⓔ Heating return
Ⓕ Condensate drain/safety valve drain: Plastic hose ∅ 22 mm

5609 059 GB

Preparing for installation (cont.)

Minimum clearances

Maintain a clearance of 700 mm in front of the Vitodens for maintenance purposes. Maintenance clearances to the l.h. or r.h. side of the Vitodens are **not** required.

Preparing for installation (cont.)

Fitting the wall mounting bracket

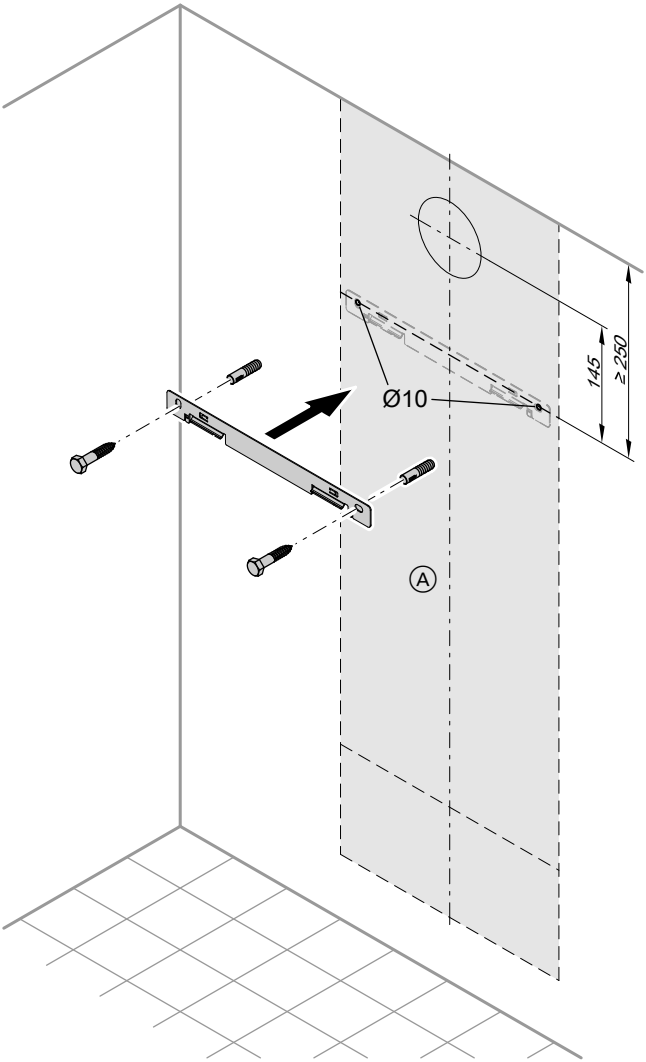

Ⓐ Vitodens installation template

5609 059 GB

Preparing for installation (cont.)

1. Position the supplied installation template on the wall.

2. Mark out the rawl plug holes.

3. Drill ∅ 10 mm holes and insert the rawl plugs supplied.

4. Fit wall mounting bracket with screws supplied.

Fit installation aid or mounting frame

Installation aid or mounting frame installation instructions

Preparing the connections

! **Please note**
To prevent equipment damage, install all pipework free of load and torque stress.

1. Prepare the water connections. Flush the heating system.

2. Prepare the gas connection.

3. Prepare the electrical connections.
   - Power cable NYM-J 3 x 1.5 mm^2.
   - Accessory cables:
     NYM-O two-core min. 0.5 mm^2.

Fitting the boiler and making connections

Removing the front panel and mounting the boiler

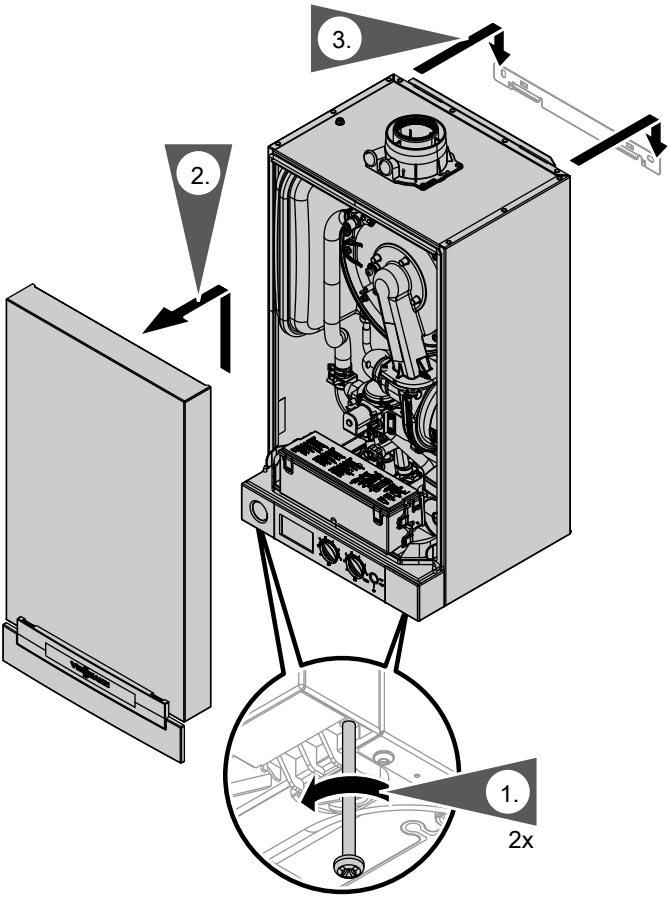

1. Undo screws at the bottom of the boiler; do not remove completely.
2. Remove front panel.
3. Hook the boiler into the wall mounting bracket.

Fitting the boiler and making connections (cont.)

Making the connections on the water side

For fittings on the heating water side and DHW side, see separate installation instructions.

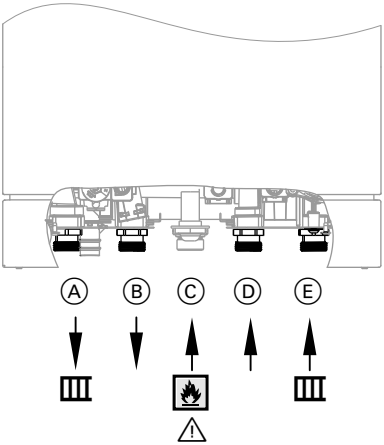

Ⓐ Heating flow
Ⓑ Gas condensing boiler:
Cylinder flow
Gas condensing combi boiler:
DHW
Ⓒ Gas connection
Ⓓ Gas condensing boiler:
Cylinder return
Gas condensing combi boiler:
Cold water
Ⓔ Heating return

Gas condensing boiler

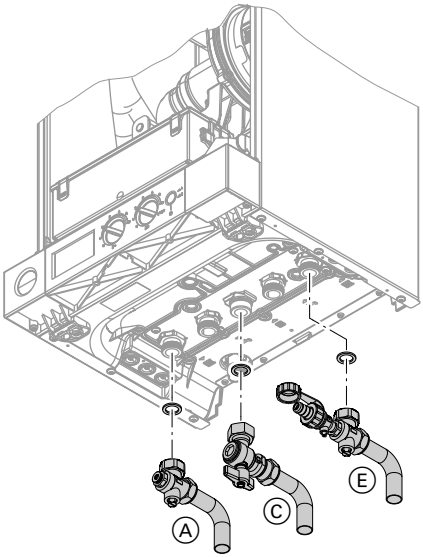

Note
In accordance to the Fittings Directive G24.2a this is a temporary connection and has to be removed immediately after filling.

Fitting the boiler and making connections (cont.)

Gas condensing combi boiler

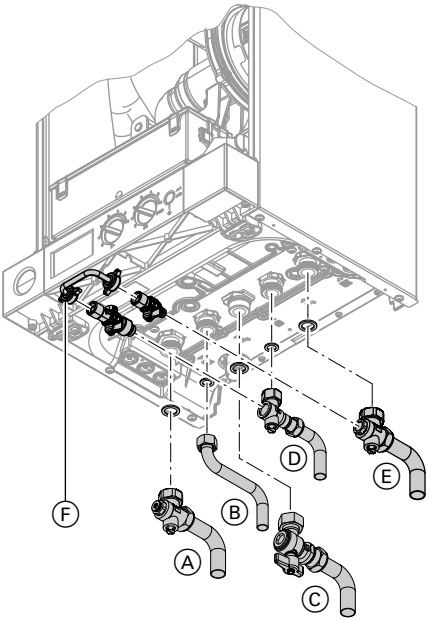

Ⓕ Filling loop

Gas connection

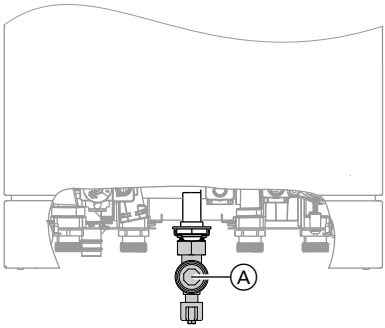

1. Connect gas shut-off valve to connection Ⓐ.

5609 059 GB

Fitting the boiler and making connections (cont.)

2. Carry out a tightness test.

   Note
   Only use suitable and approved leak detection agents (EN 14291) and devices to check for leaks. Leak detection agents with unsuitable constituents (e.g. nitrites, sulphides) can cause material damage.
   Remove residues of the leak detection agent after testing.

   ! **Please note**
   Excessive test pressure may damage the boiler and the gas valve.
   Max. test pressure 150 mbar. Where higher pressure is required for tightness tests, disconnect the boiler and the gas valves from the gas supply pipe (undo the fitting).

3. Vent the gas line.

Fitting the boiler and making connections (cont.)

Connection, safety valve and condensate drain

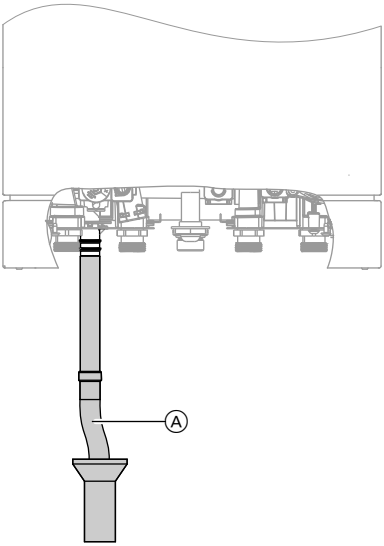

- The condensate pipe is connected with the discharge pipe of the safety valve. The condensate hose supplied meets the temperature requirements that are part of the CE certification.
- Connecting the condensate pipe internally to the domestic waste water system, either directly or via a tundish or washing machine trap, is recommended.

- If the condensate pipe is routed outside the building, use a pipe with at least ∅ 30 mm and protect this pipe from frost. Avoid long external pipelines.

! **Please note**
Frozen condensate pipes can result in faults and damage to the boiler.
Always insulate condensate pipes against frost.

- Observe local building regulations.

Connect condensate pipe Ⓐ with a constant fall and a pipe vent to the public sewage system.
Observe the local waste water regulations.

Note
Fill the siphon with water before commissioning.

Fitting the boiler and making connections (cont.)

Filling the siphon with water

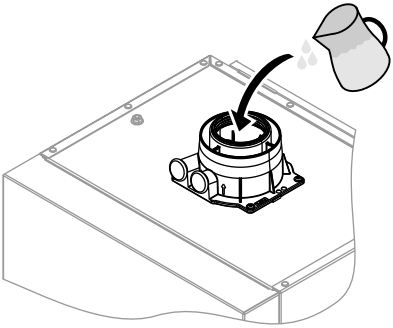

Pour a minimum of 0.3 l of water into the flue outlet.

Please note
During commissioning, flue gas may escape from the condensate drain.
Always fill the siphon with water before commissioning.

Balanced flue connection

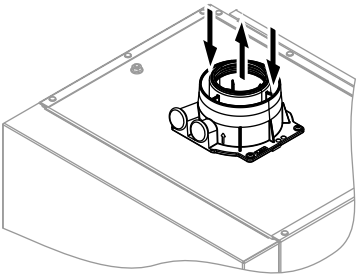

Connect the balanced flue.
During installation and positioning of the flue system, observe Part J of the Building Regulations and BS 5440 building regulations.

Flue system installation instructions.

Opening the control unit casing

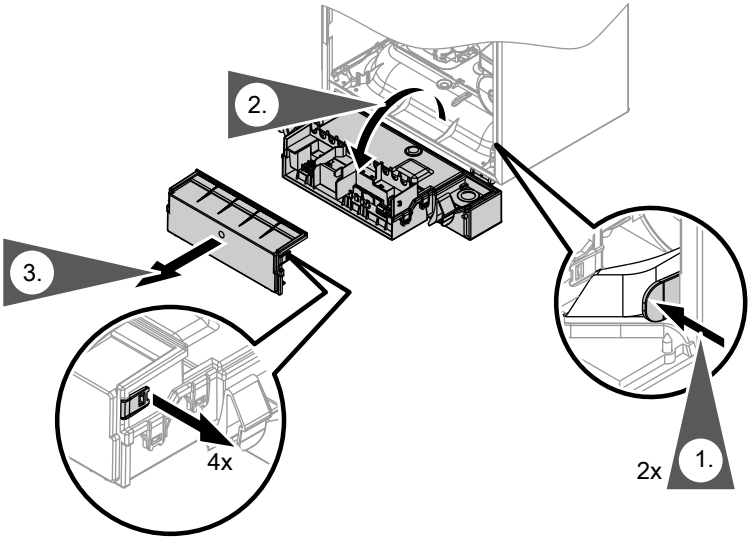

! **Please note**
Electronic assemblies can be damaged by electrostatic discharge.
Before beginning work, touch earthed objects, such as heating or water pipes, to discharge static loads.

Electrical connections

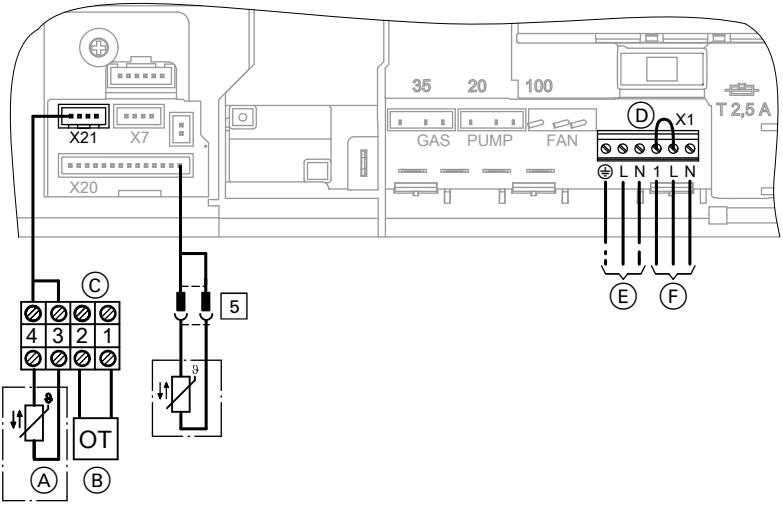

5 Gas condensing boiler:
- In the case of Viessmann DHW cylinders: Cylinder temperature sensor (plug on the cable harness outside the control unit)
- In the case of alternative DHW cylinders compliant with the G3 Directive:
  Cylinder demand junction box (for connection of a cylinder temperature controller and a 2-way shut-off valve)
- Without DHW cylinder:
  For operation without a DHW cylinder, set rotary selector "🌡🚿" to "0".

Ⓐ Only for weather-compensated mode:
Outside temperature sensor (accessory)

Ⓑ OpenTherm device

Ⓒ Connecting cable (accessory)

Ⓓ Jumper

Ⓔ Power supply (230 V, 50 Hz).
See page 23

Ⓕ Vitotrol 100 or on-site room temperature controller (230 V switched input)
Remove jumper Ⓓ when making this connection.

Separate installation instructions

Information on connecting accessories
When connecting accessories observe the separate installation instructions provided with them.

Electrical connections (cont.)

Connection of room temperature controller and DHW cylinder with 230 V cylinder temperature controller

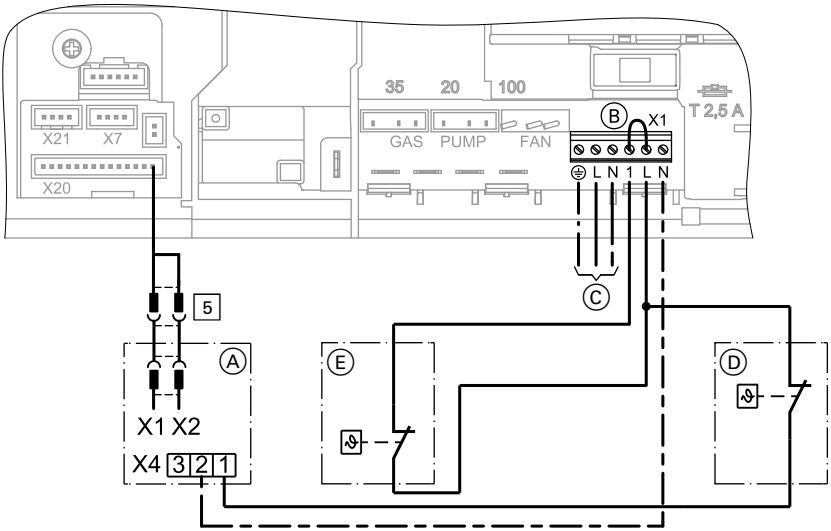

Ⓐ Cylinder demand terminal box
Ⓑ Jumper, remove when making this connection
Ⓒ Power supply (230 V, 50 Hz). See page 23
Ⓓ Cylinder temperature controller 230 V
Ⓔ Room temperature controller

5609 059 GB

Electrical connections (cont.)

Connection of room temperature controller with time switch and DHW cylinder with 2-way valve and 230 V cylinder temperature controller

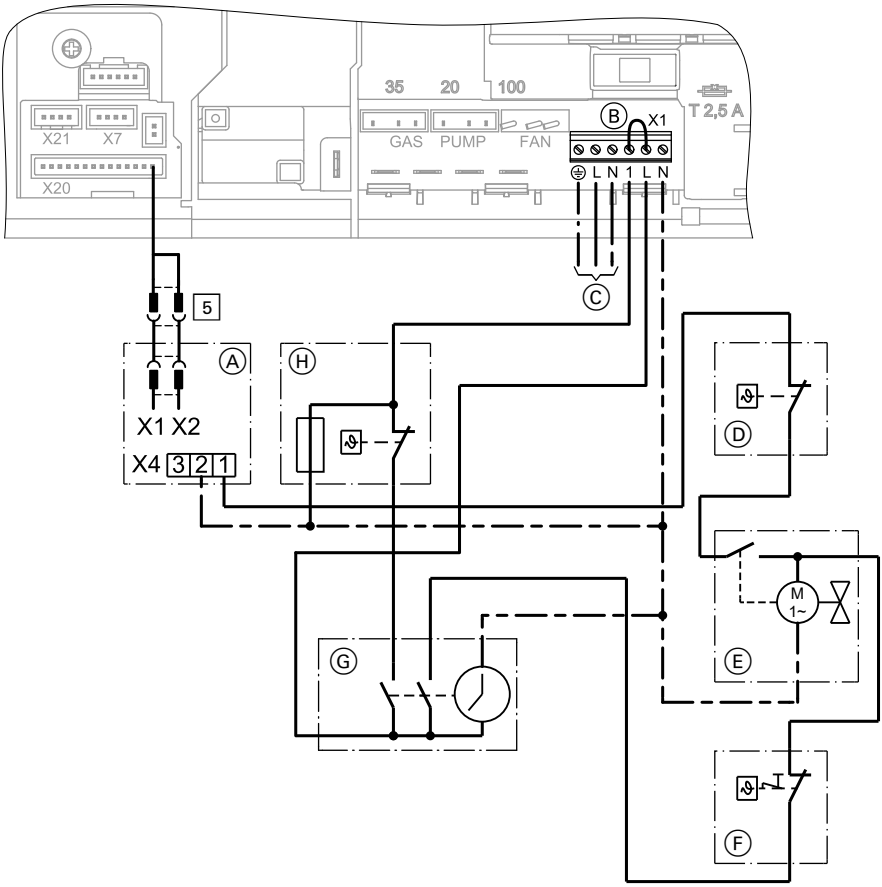

Ⓐ Cylinder demand terminal box
Ⓑ Jumper, remove when making this connection
Ⓒ Power supply (230 V, 50 Hz). See page 23
Ⓓ Cylinder temperature controller 230 V
Ⓔ 2-way shut-off valve
Ⓕ High limit safety cut-out
Ⓖ Time switch
Ⓗ Room temperature controller

5609 059 GB

Electrical connections (cont.)

Cable entry

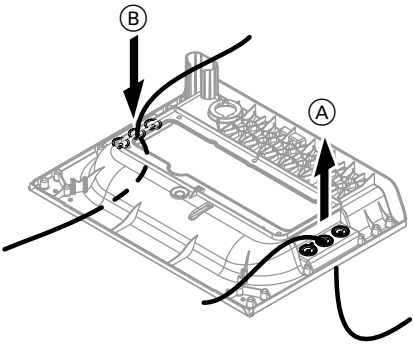

Ⓐ Power cable, remote control connecting cable
Ⓑ LV leads (sensor leads)

Outside temperature sensor (accessory)

1. Fit outside temperature sensor.

   Installation location:
   - North or north-westerly wall, 2 to 2.5 m above ground level; in multi storey buildings, in the upper half of the second floor
   - Not above windows, doors or vents
   - Not immediately below balconies or gutters
   - Never render over
   - Connection:
     2-core lead, length max. 35 m with a cross-section of 1.5 mm^2

2. Plug the power cable supplied with the outside temperature sensor into slot "X21".

3. Connect the outside temperature sensor to terminals 3 and 4.

Electrical connections (cont.)

Power supply

Regulations and Directives

Danger
Incorrectly executed electrical installations can result in injuries from electrical current and in appliance damage.

Connect the power supply and implement all safety measures (e.g. RCD circuit) in accordance with the following regulations:
- IEC 60364-4-41
- VDE regulations [IEE or local regulations]
- Connection requirements specified by your local power supply utility

Install an isolator in the power supply line that simultaneously isolates all non-earthed conductors from the mains with at least 3 mm contact separation.

Protect the power cable with an external 3 A fuse to BS 1362.

Danger
Incorrect core allocation can result in serious injury and damage to the appliance.
Take care **not** to interchange wires "L1" and "N".

Danger
The absence of component earthing can lead to serious injury from electric current if an electrical fault occurs.
Connect the appliance and pipework to the equipotential bonding of the building in question.

Electrical connections (cont.)

Routing connecting cables and closing the control unit enclosure

! **Please note**
Connecting cables will be damaged if they touch hot components.

When routing and securing cables/leads on site, ensure that the maximum permissible temperatures for these cables/leads are not exceeded.

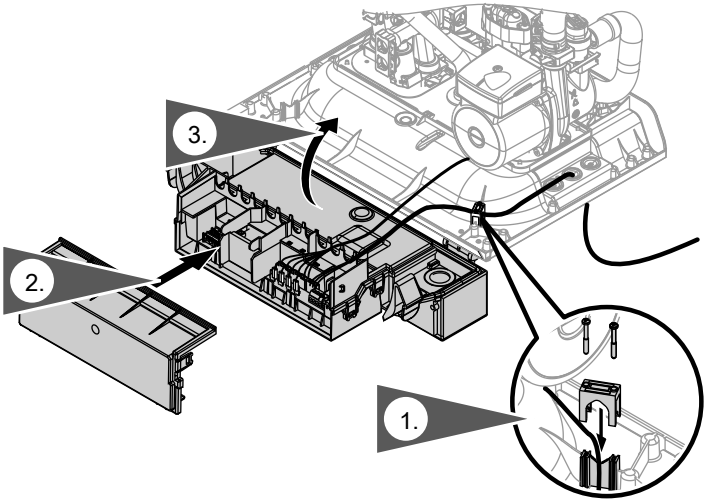

Steps - commissioning, inspection and maintenance

For further information regarding the individual steps, see the page indicated

Commissioning steps	Inspection steps	Maintenance steps		Page
•	•	•	**1. Filling the heating system**	26
•	•	•	**2. Venting the boiler by flushing**	28
•	•	•	**3. Changing to operation with LPG**	29
•	•	•	**4. Checking the static and supply pressure**	30
•			**5. Matching the burner output to the flue system**	31
•			**6. Reducing the max. heating output**	32
•			**7. Matching the circulation pump to the heating system**	34
•			**8. Checking the CO_2 content**	36
	•	•	**9. Burner removal**	38
	•	•	**10. Checking the burner gasket and burner gauze assembly**	39
	•	•	**11. Checking and adjusting electrode**	40
	•	•	**12. Cleaning the heat exchanger**	41
	•	•	**13. Checking the condensate drain and cleaning the siphon**	41
	•	•	**14. Burner installation**	42
	•	•	**15. Checking the diaphragm expansion vessel and system pressure**	43
•	•	•	**16. Checking all connections on the heating water side and DHW side for leaks**	
•	•	•	**17. Checking firm seating of electrical connections**	
•	•	•	**18. Checking all gas equipment for tightness at operating pressure**	44
	•	•	**19. Fitting the front panel**	45
•			**20. Instructing the system user**	45

Service

5609 059 GB

Further details regarding the individual steps

Filling the heating system

! **Please note**
Unsuitable fill water increases the level of deposits and corrosion and may lead to boiler damage.
- Flush the heating system thoroughly before filling.
- Only fill with water of potable quality.
- Soften fill water harder than 300 ppm.
- An antifreeze additive suitable for heating systems can be added to the fill water.

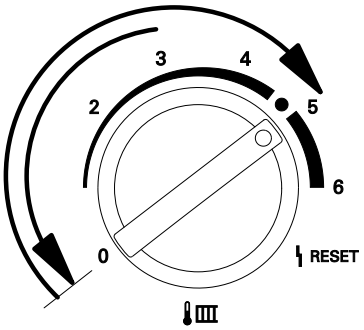

1. Close the gas shut-off valve.
2. Switch ON the power supply.
3. Turn rotary selector "" anticlockwise for less than 2 s and then clockwise back into its control range on the right.
   "SERV", **""** and "" will appear on the display. Filling has been activated.
   This function will end automatically after 20 min or after the ON/OFF switch has been turned off.

Further details regarding the individual steps (cont.)

Gas condensing boiler

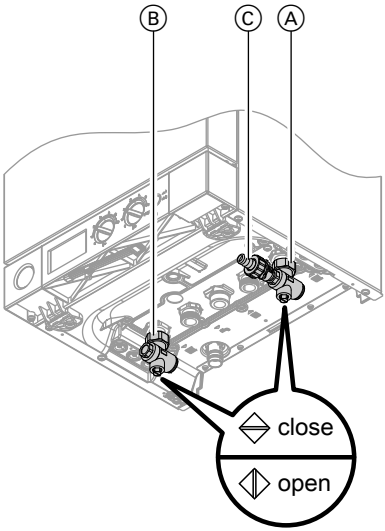

1. Open shut-off valves Ⓐ and (if fitted) Ⓑ.
2. Connect fill hose to valve Ⓒ and open valve Ⓒ.
3. Fill heating system [a removable filling loop with double check valve must be used in UK] (system pressure 0.8 to 1.2 bar).
4. Close valve Ⓒ.

Gas condensing combi boiler

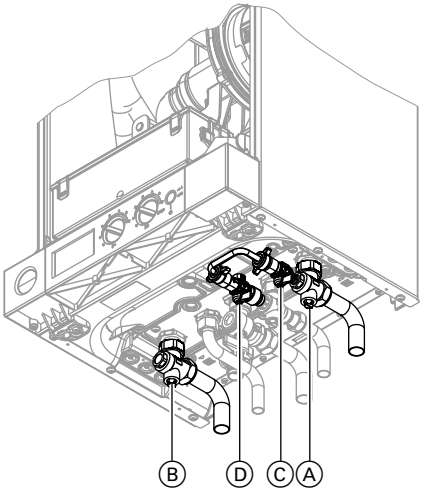

1. Open shut-off valves Ⓐ and (if fitted) Ⓑ.
2. Open valves Ⓒ and Ⓓ.

   Note
   The cold water supply must be open.

3. Fill the heating system (system pressure 0.8 to 1.2 bar).
4. Close valves Ⓒ and Ⓓ.

Further details regarding the individual steps (cont.)

Venting the boiler by flushing

Gas condensing boiler

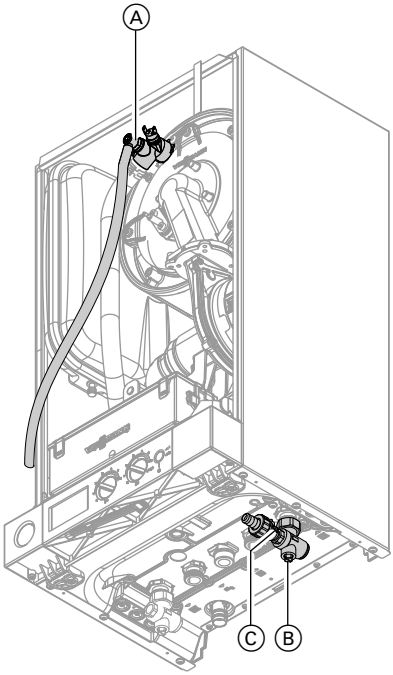

1. Connect the drain hose on shut-off valve Ⓐ to a drain.
2. Close shut-off valve Ⓑ.
3. Open valves Ⓐ and Ⓒ and flush at mains pressure, until no sound of escaping air can be heard.
4. First close valve Ⓐ and then valve Ⓒ.
5. Adjust operating pressure ≥ 0.8 bar with valve Ⓒ.
6. Open shut-off valve Ⓑ.
7. Disconnect drain hose and put to one side.

Further details regarding the individual steps (cont.)

Gas condensing boiler

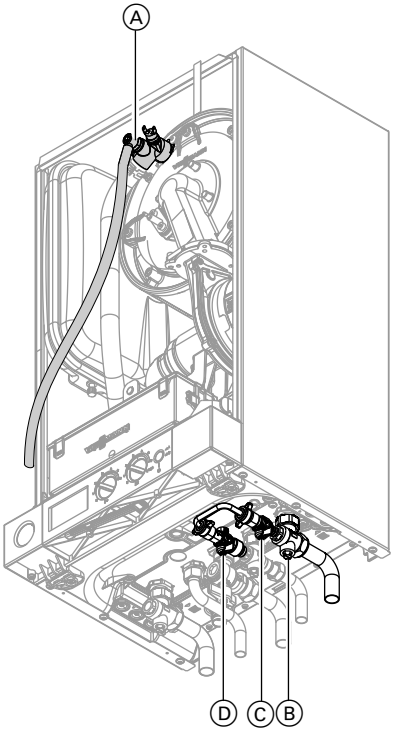

1. Connect the drain hose on shut-off valve Ⓐ to a drain.
2. Close shut-off valve Ⓑ.
3. Open valves Ⓐ, Ⓒ and Ⓓ and flush at mains pressure, until no sound of escaping air can be heard.
4. First close valve Ⓐ and then valves Ⓒ and Ⓓ.
5. Adjust operating pressure ≥ 0.8 bar with valves Ⓒ and Ⓓ.
6. Open shut-off valve Ⓑ.
7. Disconnect drain hose and put to one side.

Changing to operation with LPG

In the delivered condition, the boiler is set up for operation with natural gas. Change the gas nozzle when operating with LPG and change the gas type at the control unit.

Separate installation instructions.

Changing from LPG to natural gas - see page 61.

Further details regarding the individual steps (cont.)

Checking the static and supply pressure

Danger
CO build-up as a result of incorrect burner adjustment can have serious health implications.
Carry out a CO test before and after work on gas appliances.

Operation with LPG
Flush the LPG tank twice during commissioning or replacement. Vent the tank and gas supply line thoroughly after flushing.

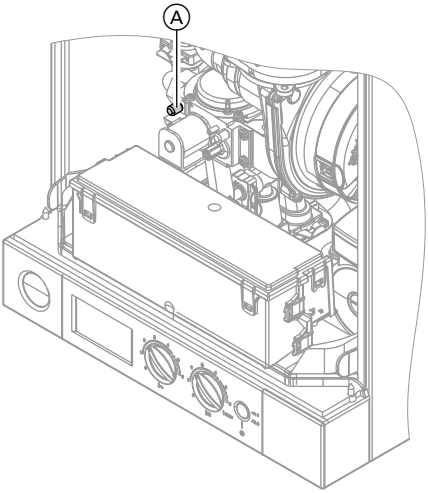

1. Close the gas shut-off valve.

2. Undo screw Ⓐ inside test nipple "IN" on the gas train but do not remove it, and connect the pressure gauge.

3. Open the gas shut-off valve.

4. Check the static pressure.
   Set value: max. 57.5 mbar.

5. Start the boiler.

   Note
   During commissioning, the boiler can enter a fault state because of airlocks in the gas line. After approx. 5 s press ***Reset*** *to reset the burner.*

6. Check the supply (flow) pressure.

   Set value:
   - Natural gas: 20 mbar
   - LPG: 37 mbar

   Note
   Use a suitable measuring device with a resolution of at least 0.1 mbar to check the supply pressure.

7. Record the actual value in the report on page.
   Take the action shown in the following table.

8. Shut down the boiler, close the gas shut-off valve, remove the pressure gauge and close test nipple Ⓐ with the screw.

Further details regarding the individual steps (cont.)

9. Open the gas shut-off valve and start the appliance.

Danger
Gas escaping from the test nipple leads to a risk of explosion.
Check gas tightness at test nipple Ⓐ.

Note
The maximum pressure drop between the gas shut-off valve and test nipple Ⓐ at the gas train is 0.5 mbar.

Supply pressure (flow pressure)		Action
For natural gas	**For LPG**	
below 17.4 mbar	below 25 mbar	Do not start the boiler. Notify your gas supply utility or LPG supplier.
17.4 to 25 mbar	25 to 47 mbar	Start the boiler.
above 25 mbar	above 47 mbar	Install a separate gas pressure governor upstream of the system and regulate the pre-charge pressure to 20 mbar for natural gas or 37 mbar for LPG. Notify your gas supply utility or LPG supplier.

Matching the burner output to the flue system

To match the burner output to the system's flue pipe length, a correction factor can be set.

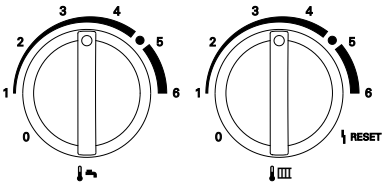

1. Turn on the ON/OFF switch.
2. Turn both rotary selectors "🌡🚿" and "🌡▥" simultaneously into their respective central positions.
   "SERV" appears on the display.
3. Refer to the following table for the correction factor required for the connected flue system.

Service

5609 059 GB

Further details regarding the individual steps (cont.)

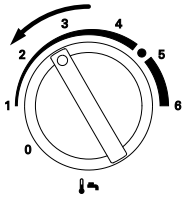

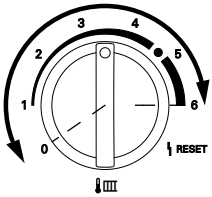

4. Within 2 s, turn rotary selector "🌡🚿" to the top left range.
   The display shows "🌡", "🚿", "🔥", and the selected correction factor flashes.
   In the delivered condition, factor 0 has been set.

5. Within 15 s, set rotary selector "🌡" to the required correction factor.

6. The set correction factor is saved when the value stops flashing, and the control unit returns to standard mode.

Correction factor		**1**	**2**	**3**	**4**	**5**	**6**
Flue system	**Rated heating output (kW)**	**Max. run length (m)**					
Open flue operation ∅ 60 mm	19	4	10	16	22	—	—
	26/30	2	8	13.5	18.5	22	25
	35	5	12	18	23	—	—
Balanced flue operation ∅ 60/100 mm **coaxial**	19	2	6	10	13	16	19
	26/30	1	4	7	10	12	13.5
	35	3	6	9	12	14	17

Observe max. flue lengths. A calculated performance verification is required if the max. flue lengths in the table are exceeded.

Reducing the max. heating output

The max. heating output can be reduced according to the system requirements.

1. Turn on the ON/OFF switch.

5609 059 GB

Further details regarding the individual steps (cont.)

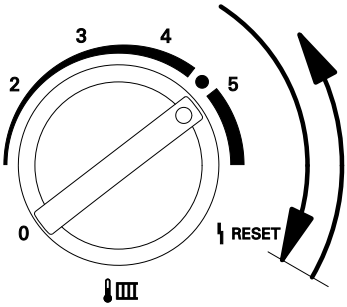

2. Turn rotary selector "🌡" for less than 2 s fully clockwise and then back into its control range on the right. **"SERV"** and "🔧" appear on the display.

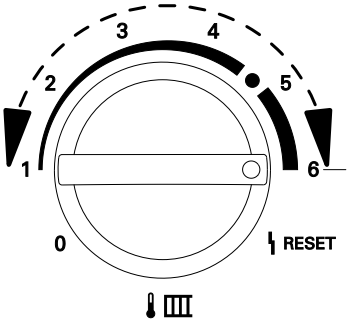

3. Select the required max. heating output with rotary selector "🌡".
Bars for the selected heating output flash on the display.

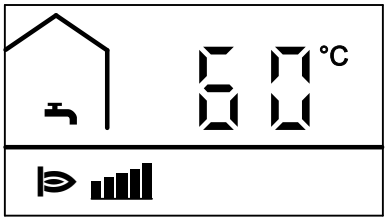

- Position 1 (1 bar) = lower heating output.
- Position 6 (5 bars) = upper heating output.

4. Test selected heating output by measuring the gas throughput.

Service

Further details regarding the individual steps (cont.)

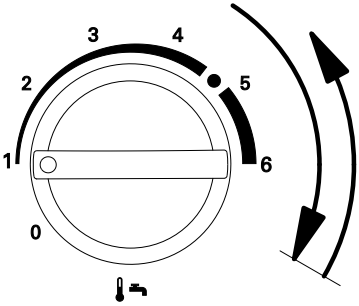

5. Transfer selected heating output: Turn rotary selector "🌡🚿" for less than 2 s fully clockwise and then back into its control range on the right. During the transfer, the display shows **"– . – . –"**.

6. Shut down the boiler.

Matching the circulation pump to the heating system

Only for gas condensing combi boilers: In the delivered condition, the circulation pump in heating mode is set to stage 1. If necessary to suit the heating system, the circulation pump can be set to stage 2.

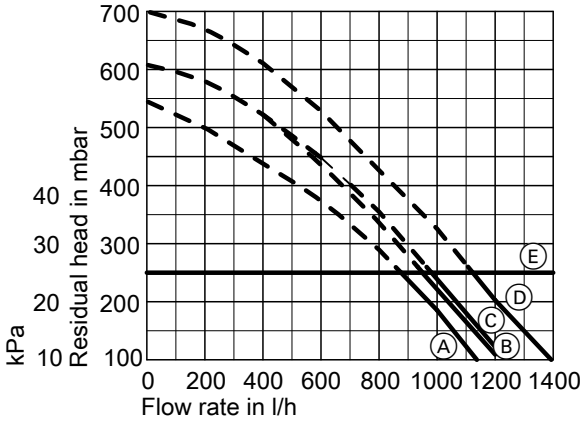

Ⓐ Gas condensing boiler 26 kW
Gas condensing combi boiler 26 kW, pump stage 1

Ⓑ Gas condensing boiler 30 kW
Gas condensing combi boiler 30 and 35 kW, pump stage 1

Ⓒ Gas condensing combi boiler 26 kW, pump stage 2

Ⓓ Gas condensing boiler 35 kW
Gas condensing combi boiler 30 and 35 kW, pump stage 2

Ⓔ Upper operational limit

5609 059 GB

Further details regarding the individual steps (cont.)

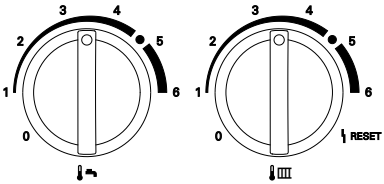

1. Turn on the ON/OFF switch.

2. Turn both rotary selectors "🌡🚰" and "🌡▥" simultaneously into their respective central positions.
   "SERV" appears on the display.

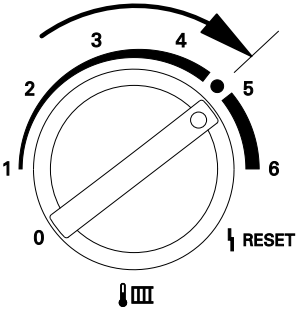

3. Within 2 s, turn rotary selector "🌡▥" to the top right range.
   "▥" appears on the display and the set value flashes.

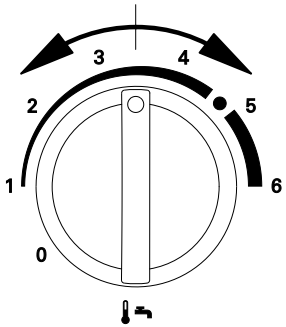

4. Adjust the control unit to stage 1 or stage 2 by turning rotary selector "🌡🚰".
   The display shows:
   - **"1"** for operation with stage 1
     or
   - **"2"** for operation with stage 2.

5. The set operating mode is saved when the value stops flashing, and the control unit returns to standard mode.

Service

Further details regarding the individual steps (cont.)

Checking the CO_2 content

Vitodens 100-W is factory-set for natural gas. During commissioning or maintenance, the CO_2 and CO have to be measured at the boiler flue adaptor test point to check the flue integrity. Subject to the Wobbe index, the CO_2 content fluctuates between 7.4 % and 10.5 %. CO of up to 500 ppm during start-up is acceptable.
We recommend measuring O_2 as the value is unmistakable regarding lambda (air/gas). The O_2 content fluctuates between 7.5 % and 3.2 %. The CO/CO_2 ratio has to be less than 0.004.

If the actual CO_2 or O_2 and CO values deviate from the stated range, check the balanced flue systems for leaks. If flue installation is o.k., change the gas valve.

Note
Operate the appliance with uncontaminated combustion air to prevent operating faults and damage.

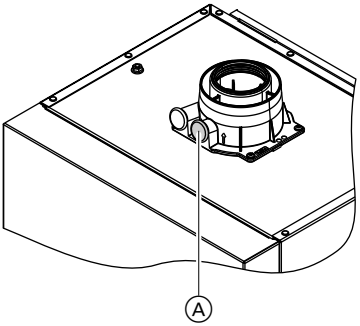

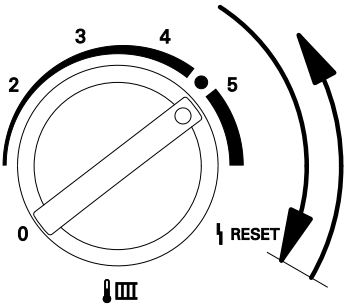

1. Connect a flue gas analyser at flue gas port Ⓐ on the boiler flue connection.

2. Start the boiler and check for leaks.

   Danger
   Escaping gas leads to a risk of explosion.
   Check gas equipment for tightness.

3. Turn rotary selector "🌡" for less than 2 s fully clockwise and then back into its control range on the right.
   The display shows **"SERV"**, "🔧" and the boiler water temperature is displayed.

5609 059 GB

Further details regarding the individual steps (cont.)

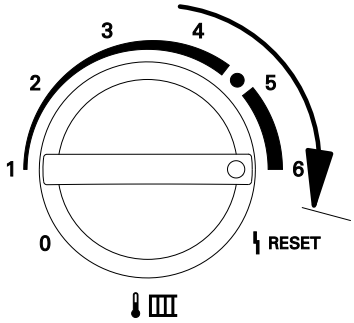

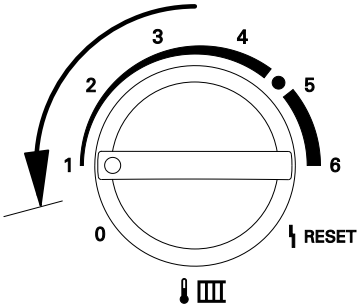

4. Adjust the upper heating output: Turn rotary selector "🌡▥" to the control range on the right until the display shows 5 bars for the upper heating output.

5. Check the CO_2 content for the upper heating output.
The CO_2 content must be between 7.0 and 10.5 %.

6. Adjust the lower heating output: Turn rotary selector "🌡▥" to the control range on the left until the display shows 1 bar for the lower heating output.

7. Check the CO_2 content for the lower heating output.
The CO_2 content must be between 0.3 and 0.9 % below the value for the upper heating output.

8.
- If the CO_2 content is within the given range, continue with point 10.
- If the CO_2 content is **outside** the given range, check the flue gas/ventilation air system for tightness; remedy any leaks.
  Replace gas train if required.

9. Check the CO_2 content for upper and lower heating output again.

10. Shut down the boiler, remove the flue gas analyser and cap flue gas aperture Ⓐ.

Further details regarding the individual steps (cont.)

11. Turn both rotary selectors "🌡🚿" and "🌡▥" into their respective original positions.

Burner removal

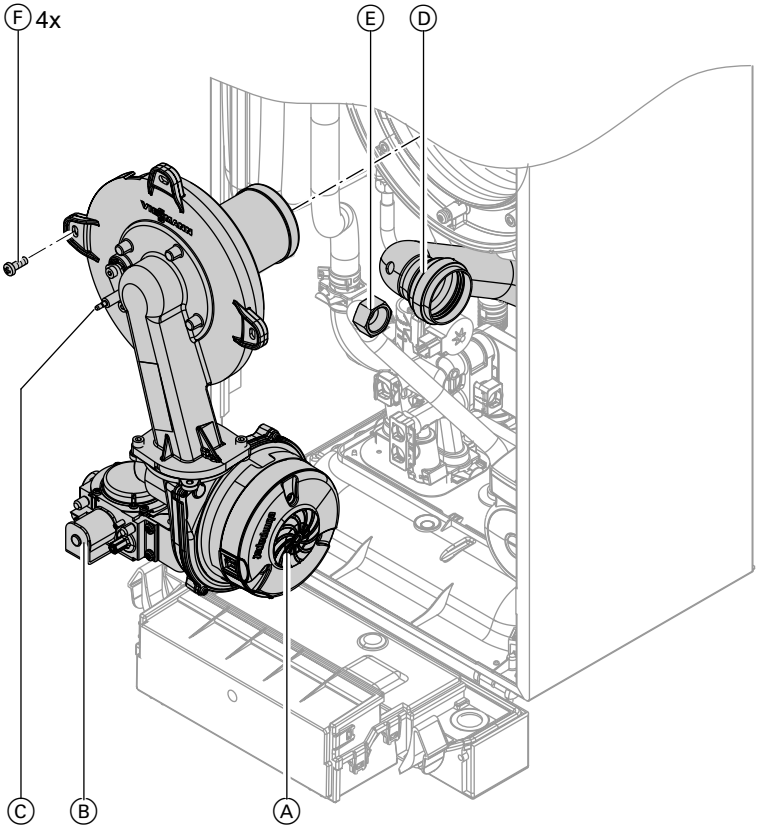

1. Switch off the power.
2. Shut off the gas supply.
3. Pull power cables from fan motor Ⓐ, gas valve Ⓑ and electrodes Ⓒ.
4. Pull venturi extension Ⓓ from the fan.
5. Undo gas supply pipe fitting Ⓔ.

5609 059 GB

Further details regarding the individual steps (cont.)

6. Undo four screws Ⓕ and remove the burner.

! **Please note**
Prevent damage.
Never rest the burner on the burner gauze assembly.

Checking the burner gasket and burner gauze assembly

Check burner gasket Ⓐ for damage and replace if required.

Replace the burner gauze assembly if it is damaged.

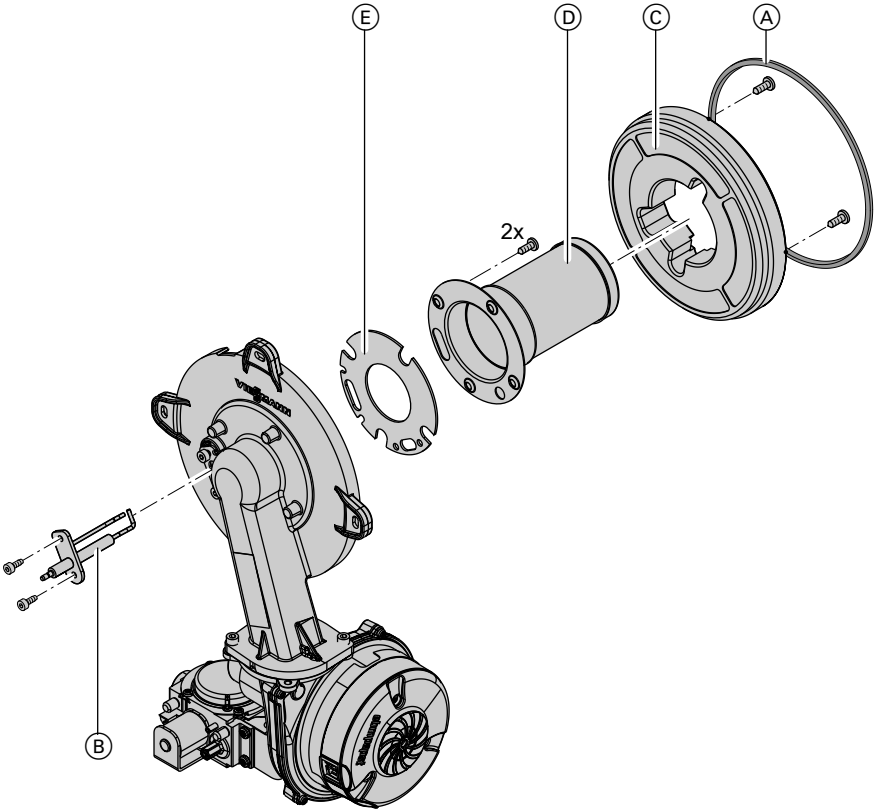

1. Remove electrode Ⓑ.

2. Undo the two Torx screws and remove thermal insulating ring Ⓒ.

3. Undo the two Torx screws and remove burner gauze assembly Ⓓ with gasket Ⓔ.

Further details regarding the individual steps (cont.)

4. Insert and secure new burner gauze assembly Ⓓ with new gasket Ⓔ.

   Please note
   Fasten screws tightly enough

   to ensure the components are not being damaged and are functioning correctly.

5. Mount thermal insulation ring Ⓒ.

   Please note
   Fasten screws tightly enough

   to ensure the components are not being damaged and are functioning correctly.

6. Fit electrode Ⓑ.

   Please note
   Fasten screws tightly enough

   to ensure the components are not being damaged and are functioning correctly.

Checking and adjusting electrode

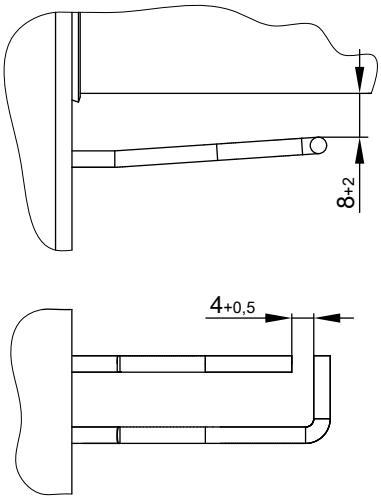

1. Check the electrode for wear and contamination.

2. Clean the electrode with a small brush (not with a wire brush) or emery paper.

3. Check the electrode gaps. If the gaps are not as specified or the electrode is damaged, replace and align the electrode together with a new gasket. Tighten electrode fixing screws.

   Please note
   Fasten screws tightly enough

   to ensure the components are not being damaged and are functioning correctly.

5609 059 GB

Further details regarding the individual steps (cont.)

Cleaning the heat exchanger

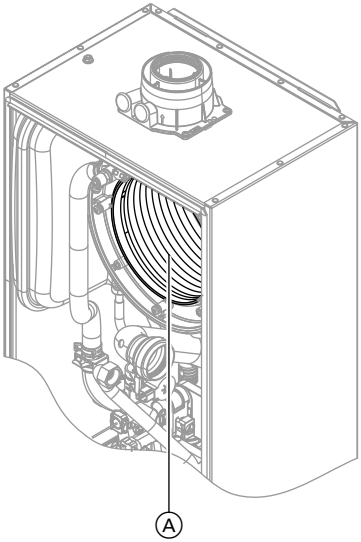

1. ! **Please note**
   Scratches on parts that are in contact with flue gas can lead to corrosion.
   Never use brushes to clean the heating surface.

   Use a vacuum cleaner to remove deposits from heat exchanger Ⓐ inside the combustion chamber.

2. If required, spray slightly acidic, chloride-free cleaning agents based on phosphoric acid onto heat exchanger Ⓐ and let the solution soak in for at least 20 min.

3. Thoroughly flush heat exchanger Ⓐ with water.

Checking the condensate drain and cleaning the siphon

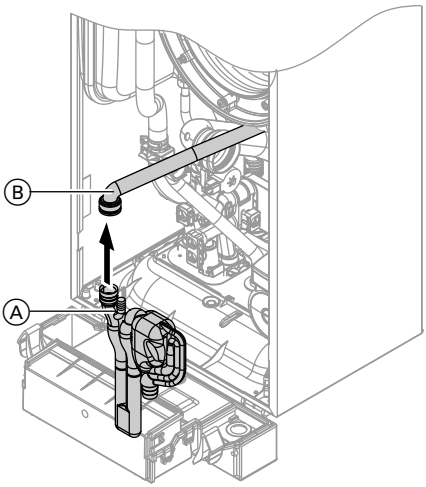

1. Pull siphon Ⓐ upwards out of the drain connection.

2. Detach supply hose Ⓑ from siphon Ⓐ.

3. Clean siphon Ⓐ.

4. Reconnect supply hose Ⓑ.

5. Refit siphon Ⓐ to the drain connection.

6. Fill siphon Ⓐ with water For this, pour approx. 0.3 l of water into the combustion chamber.

Further details regarding the individual steps (cont.)

7. Check that condensate can drain freely and that the connections are tight.

Burner installation

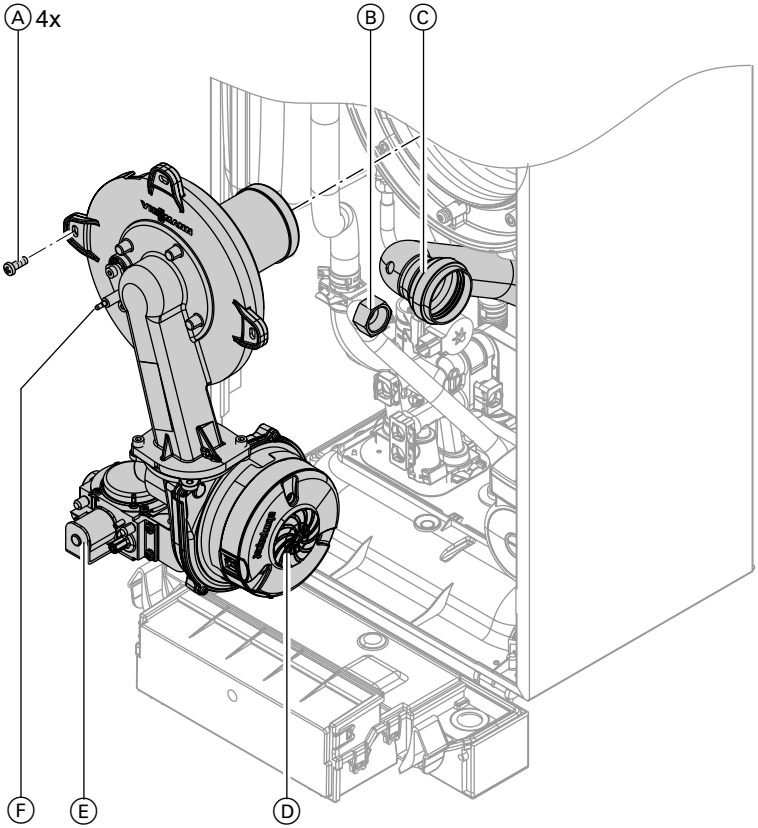

5609 059 GB

Further details regarding the individual steps (cont.)

1. Fit the burner and tighten four screws Ⓐ diagonally.

   Please note
   Fasten screws tightly enough

   to ensure the components are not being damaged and are functioning correctly.

2. Insert new gasket and tighten the fittings on gas supply pipe Ⓑ.

3. Plug the venturi extension Ⓒ into the fan.

4. Fit electrical cables to fan motor Ⓓ, gas valve Ⓔ and ignition unit Ⓕ.

5. Reopen gas supply and switch on power supply.

6. Check the gas connections for tightness.

   Danger
   Escaping gas leads to a risk of explosion.
   Check all fittings for gas tightness.

   Please note
   The use of leak detection spray can result in incorrect functions.
   Leak detection spray must not reach electrical contacts or seal diaphragm openings on the gas valve.

Checking the diaphragm expansion vessel and system pressure

Note
The diaphragm expansion vessel can lose some charge pressure over a time in use. When the boiler heats up, the pressure gauge will indicate a higher pressure of 2 or 3 bar. The safety valve too can respond and discharge excess pressure.

Check whether the installed diaphragm expansion vessel is adequate for the system water volume.
Carry out this test on a cold system.

1. Drain the system or close the cap valve on the diaphragm expansion vessel and reduce the pressure until the pressure gauge indicates "0".

2. If the pre-charge pressure of the diaphragm expansion vessel is lower than the static system pressure, top up with nitrogen until the pre-charge pressure is raised by 0.1 to 0.2 bar.

3. Top up with water until the charge pressure of the cooled system is at least 1.0 bar and 0.1 to 0.2 bar higher than the pre-charge pressure of the diaphragm expansion vessel.
   Permiss. operating pressure: 3 bar

Further details regarding the individual steps (cont.)

Note
Using key Ⓐ supplied, you can recharge the gas combi boiler at the fill valve.

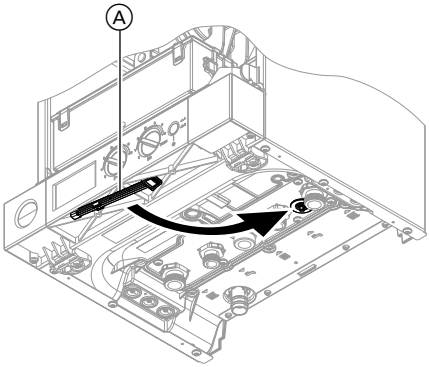

Checking all gas equipment for tightness at operating pressure

Danger
Escaping gas leads to a risk of explosion.
Check gas equipment for tightness.

Please note
The use of leak detection spray can result in incorrect functions. Leak detection spray must not reach electrical contacts or seal diaphragm openings on the gas valve.

Further details regarding the individual steps (cont.)

Fitting the front panel

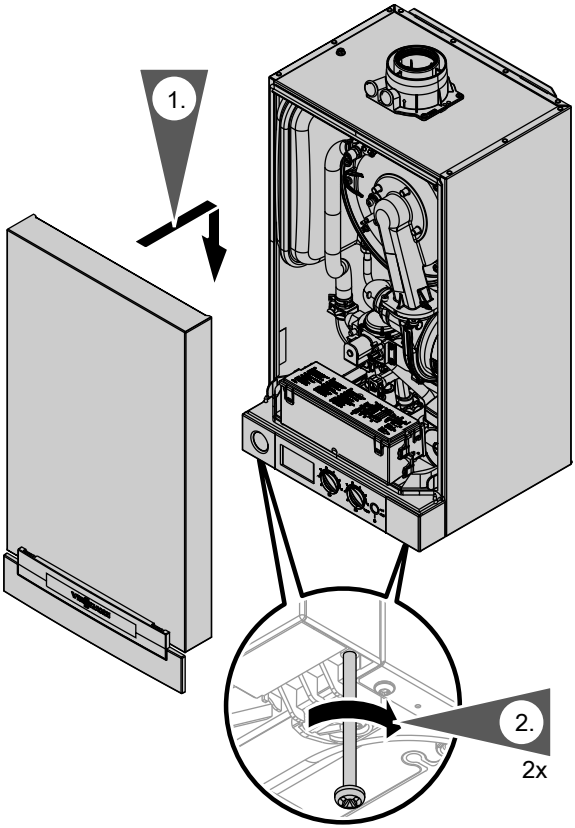

1. Hook the front panel into place.

2. Tighten screws at the bottom.

Instructing the system user

The system installer should hand the operating instructions to the system user and instruct the user in operating the system.

Function sequence and possible faults

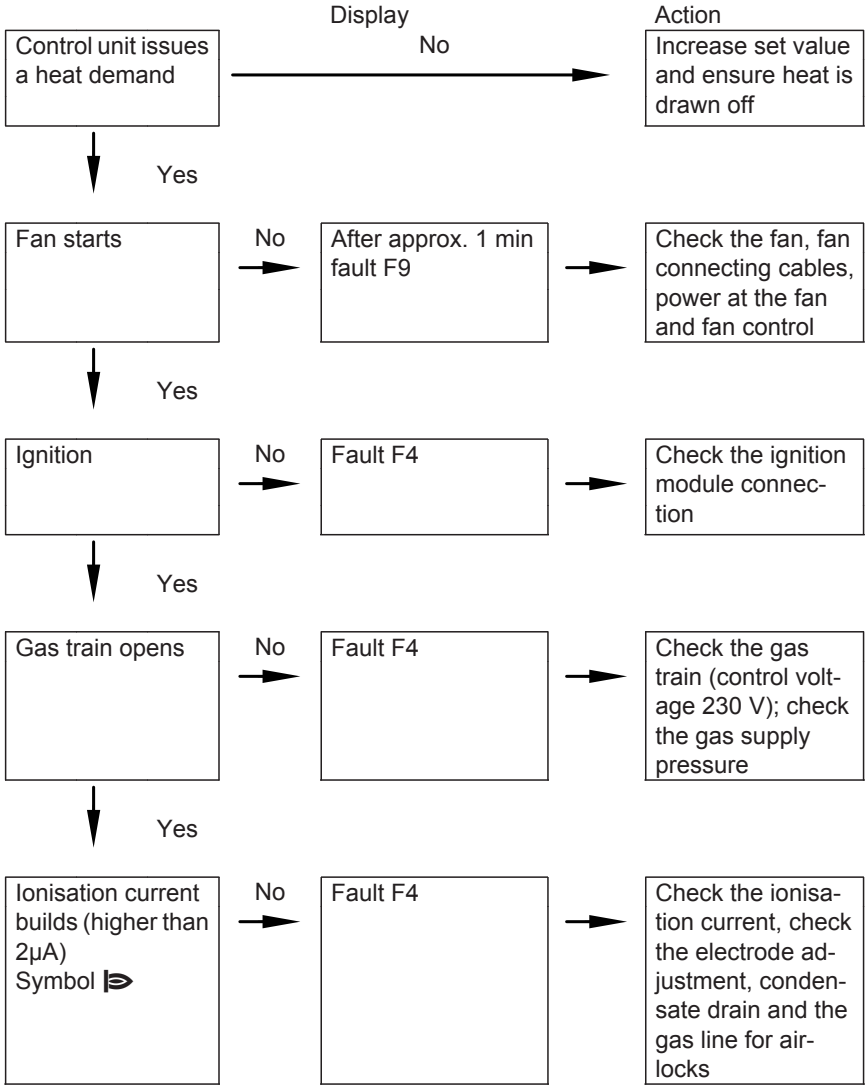

5609 059 GB

Function sequence and possible faults (cont.)

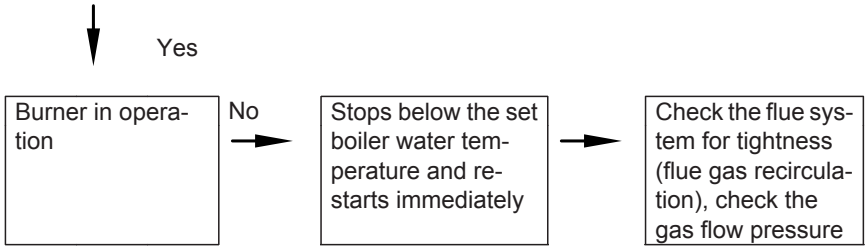

Fault messages on the display

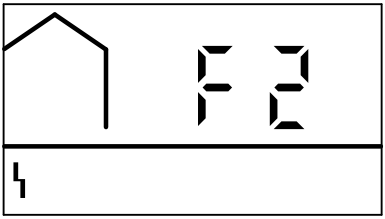

Faults are indicated by a flashing fault code with fault symbol "ϟ" on the display.
For fault code explanations see the following table.

Displayed fault code	System characteristics	Cause	Measures
10	Constant mode	Short circuit, outside temperature sensor	Check the outside temperature sensor and lead (see page 51).
18	Constant mode	Lead break, outside temperature sensor	Check the outside temperature sensor and lead (see page 51).
30	Burner blocked	Short circuit, boiler water temperature sensor	Check the boiler water temperature sensor (see page 53).
38	Burner blocked	Lead break, boiler water temperature sensor	Check the boiler water temperature sensor (see page 53).
50	No DHW heating	Short circuit, cylinder temperature sensor	Check the sensor (see page 54).

Fault messages on the display (cont.)

Displayed fault code	System characteristics	Cause	Measures
51	No DHW heating	Short circuit, outlet temperature sensor	Check the sensor (see page 56).
52	Burner blocked	Short circuit, flow sensor	Check connections and lead; replace sensor if required.
58	No DHW heating	Lead break, cylinder temperature sensor	Check the sensor (see page 54).
59	No DHW heating	Lead break, outlet temperature sensor	Check the sensor (see page 56).
5A	Burner blocked	Lead break, flow sensor	Check connections and lead; replace sensor if required.
A9	Control mode without OpenTherm device	Communication error, OpenTherm device	Check connections and lead; replace OpenTherm device if required.
b0	Burner blocked	Short circuit, flue gas temperature sensor	Check the sensor (see page 57).
b8	Burner blocked	Lead break, flue gas temperature sensor	Check the sensor (see page 57).
E3	Burner in a fault state	Fault in safety chain	Check the temperature limiter and connecting leads (see page 55). Check the control unit, and replace if required.
E5	Burner blocked	Internal fault	Check the ionisation electrode and cables. Press "Reset" (see page 50).
F0	Burner blocked	Internal fault	Replace control unit.
F1	Burner in a fault state	Max. flue gas temperature exceeded	Check heating system fill level. Check circulation pump. Vent the system. Press "Reset" (see page 50).

Fault messages on the display (cont.)

Displayed fault code	System characteristics	Cause	Measures
F2	Burner in a fault state	The temperature limiter has responded	Check heating system fill level. Check circulation pump. Vent the system. Check the temperature limiter and connecting leads (see page 55). Press "Reset" (see page 50).
F3	Burner in a fault state	Flame signal is already present at burner start	Check ionisation electrode and connecting cable. Press "Reset" (see page 50).
F4	Burner in a fault state	No flame signal	Check the ionisation electrode and connecting cables, check the gas pressure, check the gas train, ignition, ignition module and condensate drain. Press "Reset" (see page 50).
F8	Burner in a fault state	Fuel valve closes too late	Check gas train. Check both control paths. Press "Reset" (see page 50).
F9	Burner in a fault state	Fan speed too low during burner start	Check fan, fan connecting cables and power supply; check fan control. Press "Reset" (see page 50).
FA	Burner in a fault state	Fan not at standstill	Check fan, fan connecting cables and fan control. Press "Reset" (see page 50).
FC	Burner blocked	Electrical fan control (control unit) faulty	Check fan connecting cable; if required, replace or replace control unit.

Fault messages on the display (cont.)

Displayed fault code	System characteristics	Cause	Measures
Fd	Burner blocked	Fault, burner control unit	Check ignition electrodes and connecting cables. Check whether a strong interference (EMC) field exists near the appliance. Press "Reset" (see page 50). Replace control unit if fault persists.
FF	Burner blocked	Fault, burner control unit	Check ignition electrodes and connecting cables. Check whether a strong interference (EMC) field exists near the appliance. Press "Reset" (see page 50). Replace control unit if fault persists.

Initiating a reset

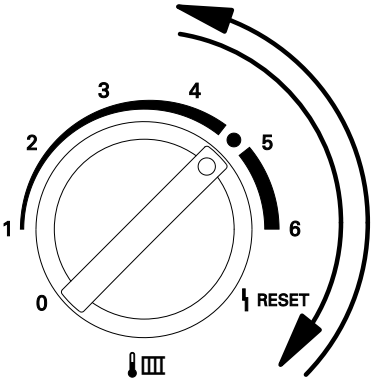

Turn rotary selector "" to "RESET" for less than 2 s, then back into the control range.

5609 059 GB

Repairs

Removing the front panel

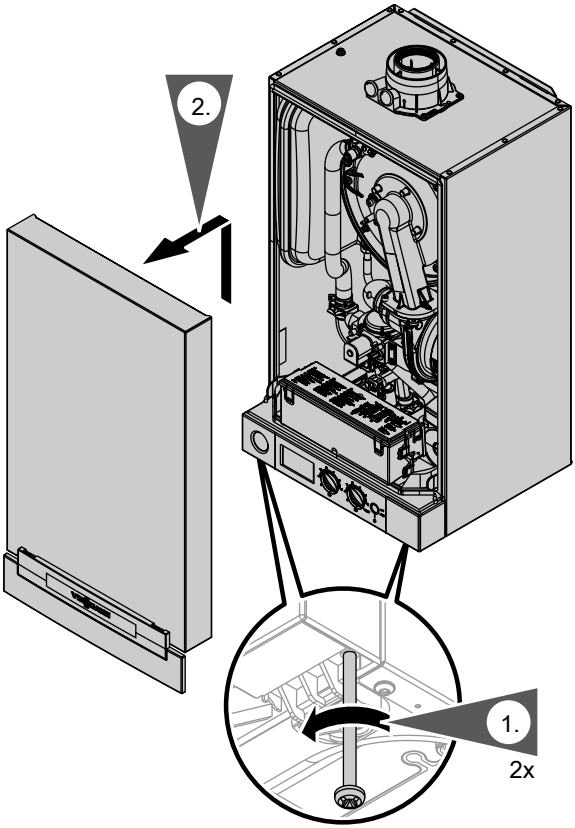

1. Undo screws at the bottom of the boiler; do not remove completely.
2. Remove front panel.

Outside temperature sensor

1. Open the control unit casing. See page 18.

Repairs (cont.)

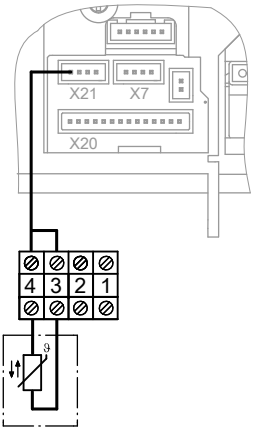

2. Disconnect leads from outside temperature sensor.

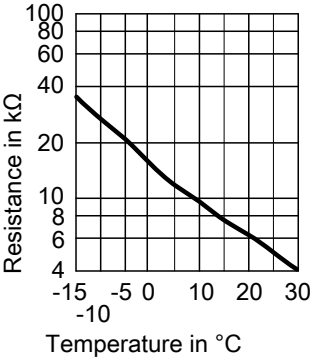

3. Check the sensor resistance and compare it with the curve.

4. Replace the sensor in the case of severe deviation.

Repairs (cont.)

Boiler water temperature sensor

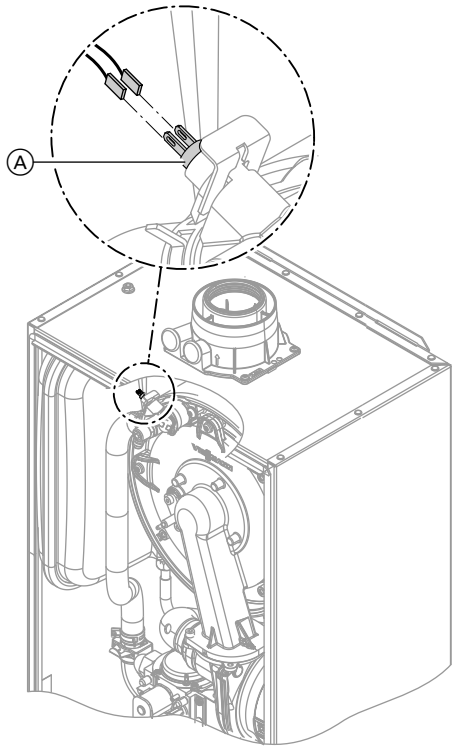

1. Pull the leads from boiler water temperature sensor Ⓐ and check the resistance.

Repairs (cont.)

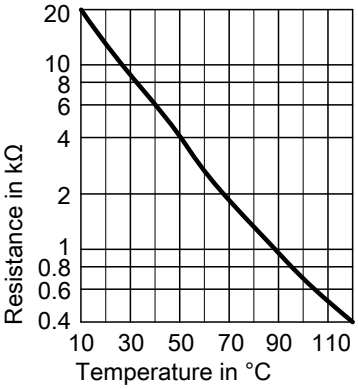

2. Check the sensor resistance and compare it with the curve.

3. In the case of severe deviation, drain the boiler on the heating water side and replace the sensor.

Danger
The boiler water temperature sensor is immersed in the heating water (risk of scalding).
Drain the boiler before replacing the sensor.

Checking cylinder temperature sensor (gas condensing boiler)

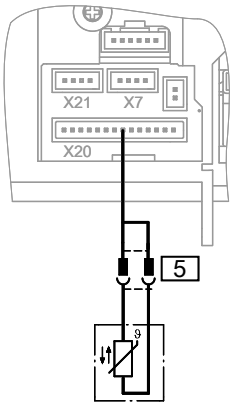

1. Remove plugs 5 from the cable harness and check the resistance.

5609 059 GB

Repairs (cont.)

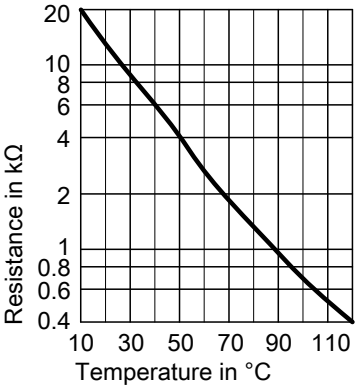

2. Compare the sensor resistance with the curve.

3. Replace the sensor in the case of severe deviation.

Checking the temperature limiter

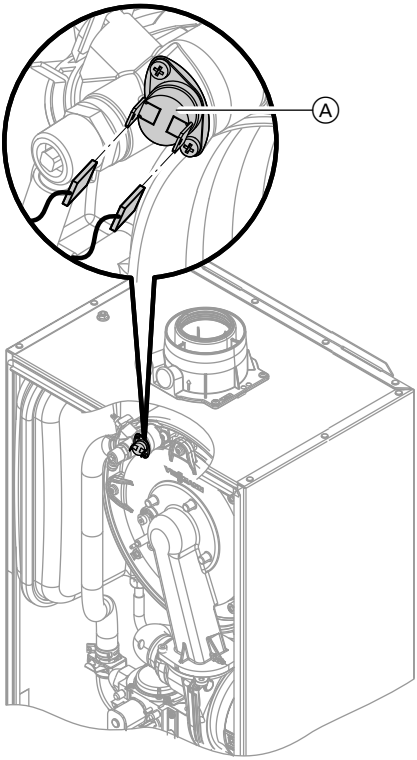

5609 059 GB

If the burner control unit cannot be reset after a fault shutdown, although the boiler water temperature is below approx. 95 °C, check the temperature limiter.

1. Pull the leads from temperature limiter Ⓐ.

2. Check the continuity of the temperature limiter with a multimeter.

3. Remove the faulty temperature limiter.

4. Install a new temperature limiter.

5. Press "Reset" at the control unit (see page 50).

Repairs (cont.)

Checking the outlet temperature sensor (gas condensing combi boiler)

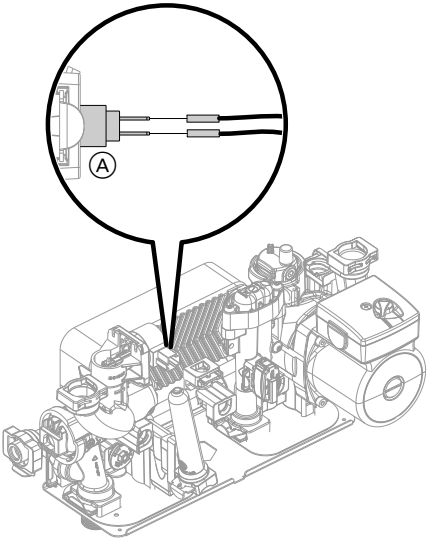

1. Pull leads from outlet temperature sensor Ⓐ.
2. Check the sensor resistance and compare it with the curve.

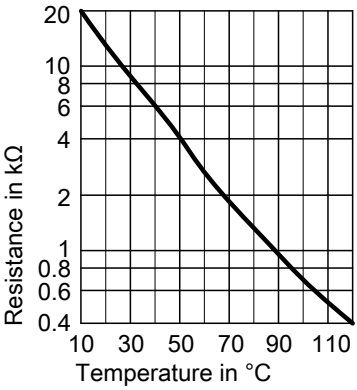

3. Replace the sensor in the case of severe deviation.

   Note
   Water can leak when replacing the outlet temperature sensor. Shut off the cold water supply. Drain the DHW line and the plate heat exchanger (DHW side).

5609 059 GB

Repairs (cont.)

Check flue gas temperature sensor.

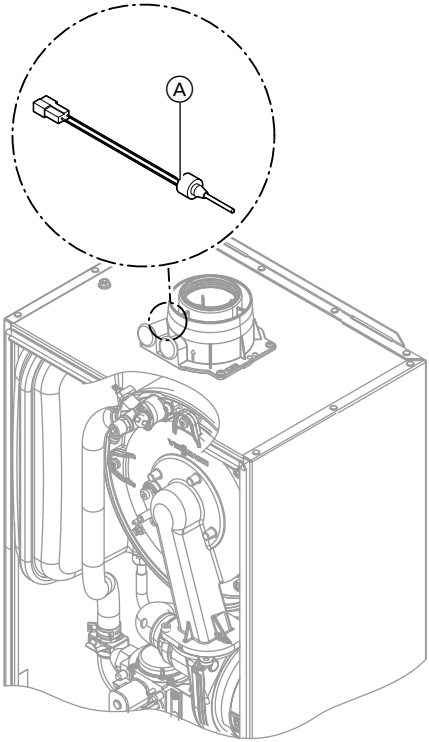

1. Pull leads from flue gas temperature sensor Ⓐ.
2. Check the sensor resistance and compare it with the curve.

Repairs (cont.)

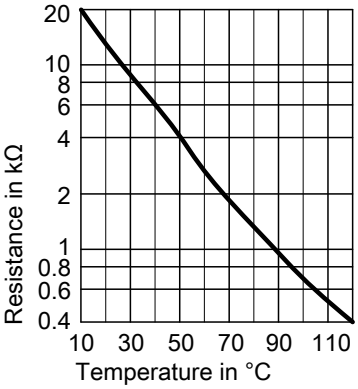

3. Replace the sensor in the case of severe deviation.

Replacing the flow limiter (gas condensing combi boiler)

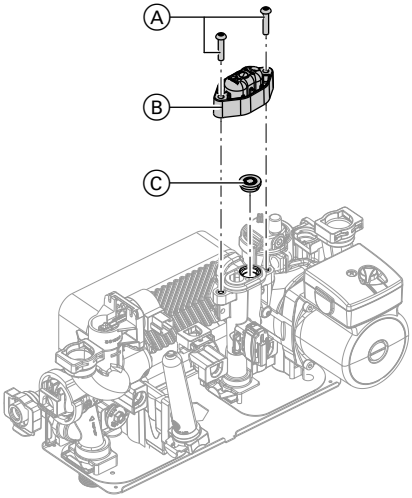

1. Drain the boiler from the DHW side.
2. Pivot the control unit downwards.
3. Undo screws Ⓐ.
4. Remove cap Ⓑ.
5. Remove faulty flow limiter Ⓒ.
6. Select new flow limiter Ⓒ in accordance with the boiler serial no. (see type plate) and the following table.
7. Insert new flow limiter Ⓒ.
8. Fit new cap Ⓑ provided.

Serial no. (Type plate)	Flow rate l/min	Colour
7499425	10	Black
7499427	12	Red
7499429	14	Brown

5609 059 GB

Repairs (cont.)

Checking or replacing the plate heat exchanger (gas condensing combi boiler)

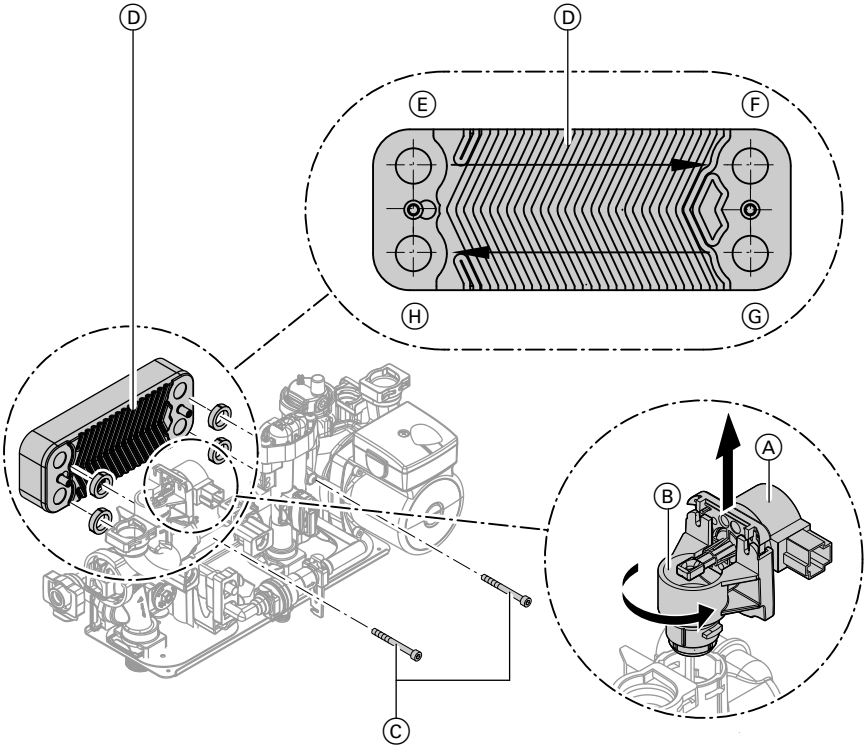

Ⓔ Heating water flow
Ⓕ Heating water return
Ⓖ Cold water
Ⓗ DHW

1. Shut off and drain the boiler on the heating water and the DHW side.
2. Pivot down control unit.
3. Push servomotor Ⓐ slightly upwards.
4. Turn adaptor Ⓑ with servomotor Ⓐ 1/8 of a turn anticlockwise and remove.

Repairs (cont.)

5. Remove two screws Ⓒ from the plate heat exchanger and remove plate heat exchanger Ⓓ with gaskets.

   Note
   During removal, small amounts of water may trickle out and escape from the plate heat exchanger.

6. Check the connections on the DHW side for scale build-up and if required clean or replace the plate heat exchanger.

7. Check the heating water side for contamination and if required clean or replace the plate heat exchanger.

8. Install in reverse order using new gaskets.

   Note
   During installation, ensure that fixing holes are aligned and gaskets seated correctly. Mount the plate heat exchanger with the correct orientation.

Checking the fuse

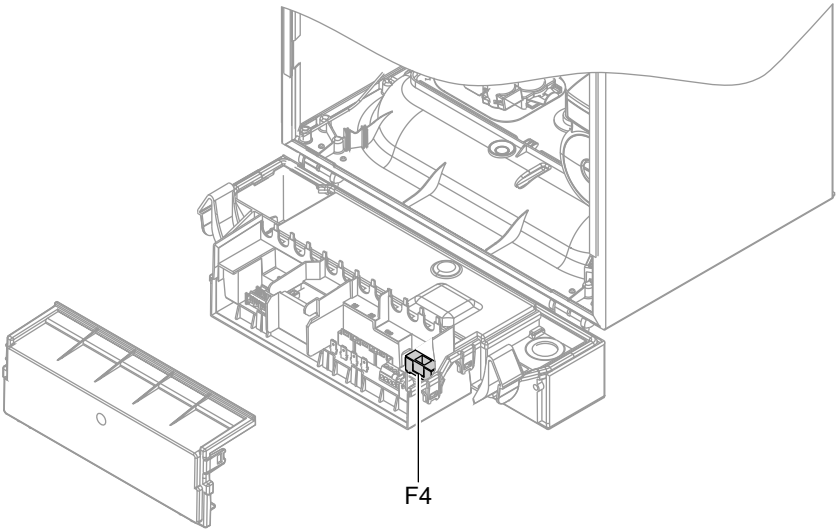

1. Switch off the power.

2. Open control unit casing (see page 18).

3. Check fuse F4.

Converting from LPG to natural gas

Removing gas restrictor

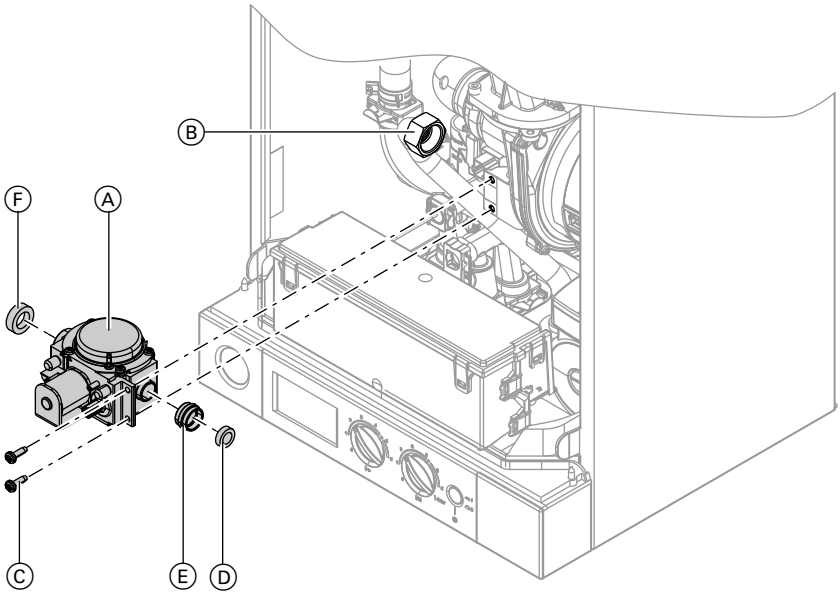

1. Pull cable from gas train Ⓐ.
2. Remove union nut Ⓑ.
3. Undo two screws Ⓒ and remove gas train Ⓐ.
4. Remove gas restrictor Ⓓ from gas train Ⓐ.
5. Mount gas train Ⓐ with new gaskets Ⓔ and Ⓕ.

   Please note
   Fasten screws tightly enough

   to ensure the components are not being damaged and are functioning correctly.

6. Remove or void gas type sticker on the top of the boiler (next to the type plate).
7. Start the boiler and check for leaks.

   Danger
   Escaping gas leads to a risk of explosion.
   Check gas equipment for tightness.

Converting from LPG to natural gas (cont.)

Changing the gas type at the control unit

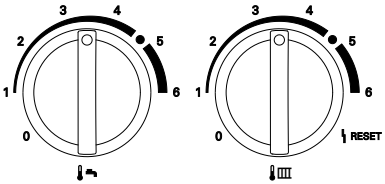

1. Turn on the ON/OFF switch.
2. Turn both rotary selectors "🌡💧" and "🌡♨" simultaneously into their respective central positions.
   "SERV" appears on the display.

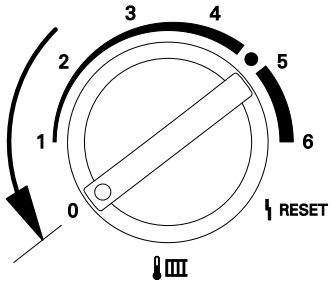

3. Turn rotary selector "🌡♨" within 2 s fully anticlockwise.
   The set value and **"🔥"** flash on the display.

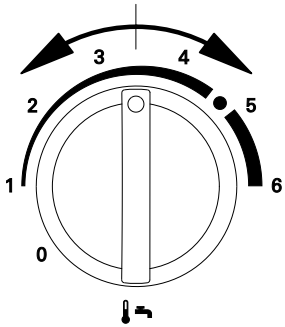

4. Change the control unit to natural gas or LPG by turning rotary selector "🌡💧".
   The display shows:
   - **"0"** for operation with natural gas
     or
   - **"1"** for operation with LPG.
5. The set operating mode is saved when the value stops flashing, and the control unit returns to standard mode.

Checking the CO_2 content

See page 36.

5609 059 GB

Functions and operating conditions in weather-compensated mode

In weather-compensated operation, the boiler water temperature is regulated according to the outside temperature.

Heating curve of the weather-compensated control unit

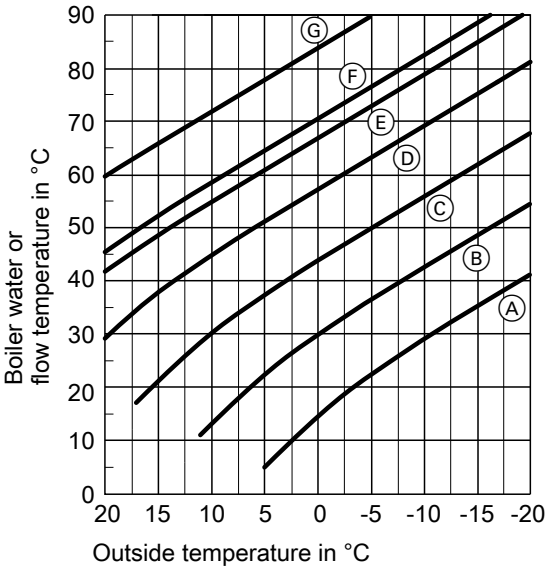

Setting of rotary selector "🌡"
- Ⓐ = 1
- Ⓑ = 2
- Ⓒ = 3
- Ⓓ = 4
- Ⓔ = Delivered condition
- Ⓕ = 5
- Ⓖ = 6

Frost protection function

Frost protection function is only possible when an outside temperature sensor is connected.

Frost protection function becomes active at outside temperatures of < 5 °C. The burner is switched on and the boiler water temperature is held at 20 °C.

Connection and wiring diagram

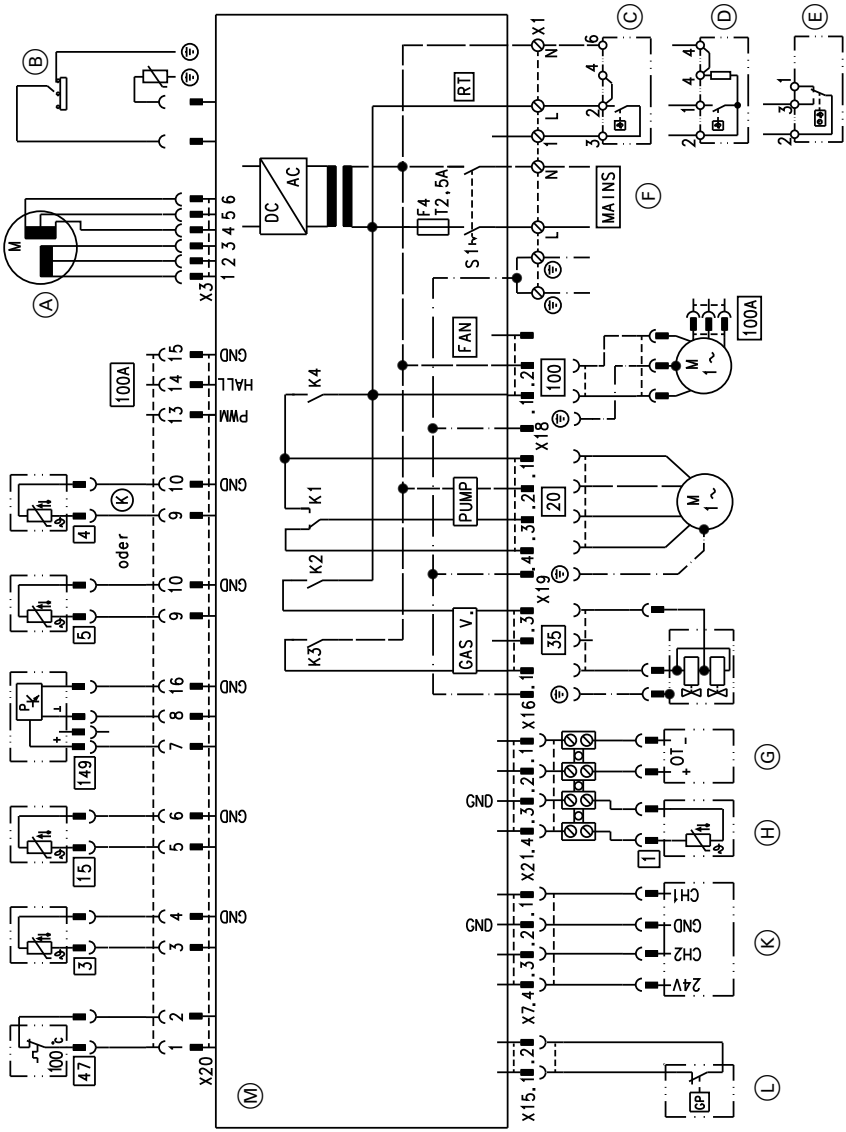

Ⓐ Stepper motor diverter valve
Ⓑ Ignition/ionisation
Ⓒ Vitotrol 100 type UTA or on-site room temperature controller (switched 230 V input)

5609 059 GB

Connection and wiring diagram (cont.)

- Ⓓ Vitotrol 100, type RT or on-site room temperature controller (switched input 230 V)
- Ⓔ Vitotrol 100 type UTDB or on-site room temperature controller (switched 230 V input)
- Ⓕ Power supply 230 V/50 Hz
- Ⓖ Remote control (OpenTherm device)
- Ⓗ Outside temperature sensor (accessory)
- Ⓚ Time switch (accessory)
- Ⓛ Gas pressure switch (accessory)
- Ⓜ PCB inside the control unit
- X ... Electrical interface
- [3] Boiler water temperature sensor
- [4] Outlet temperature sensor (gas condensing combi boiler)
- [5] Gas condensing boiler:
  - In the case of DHW cylinders from Viessmann: Cylinder temperature sensor
  - In the case of alternative DHW cylinders compliant with the G3 Directive:
    Cylinder demand junction box (for connection of a 230 V cylinder temperature controller and a 2-way shut-off valve)
- [15] Flue gas temperature sensor
- [20] Circulation pump 230 V~
- [35] Gas solenoid valve
- [47] Temperature limiter
- [100] Fan motor 230 V~
- [100]A Fan control
- [149] Flow sensor

Ordering parts

The following information is required:

- Serial no. (see type plate Ⓐ)
- Assembly (from this parts list)
- Position number of the individual part within the assembly (from this parts list)

Standard parts are available from your local supplier.

Overview of the assemblies

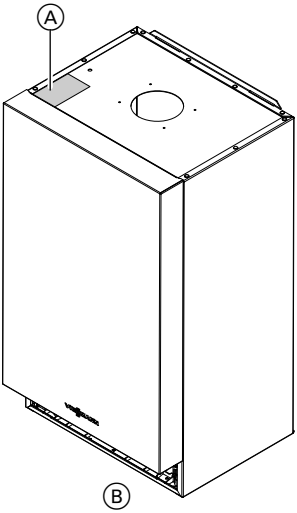

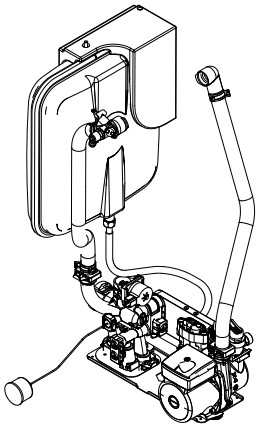

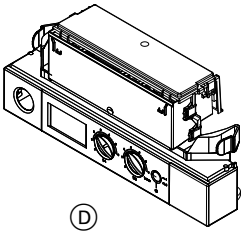

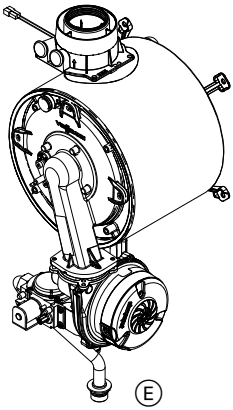

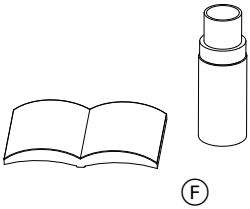

Ⓐ Type plate
Ⓑ Sheet metal parts assembly
Ⓒ Hydraulic assembly
Ⓓ Control unit assembly
Ⓔ Heat cell assembly
Ⓕ Miscellaneous assembly

Sheet metal parts assembly

0001 Front panel
0002 Profiled seal
0003 Logo
0004 Strain relief upper part
0005 Air box floor
0006 Diaphragm grommets (set)
0007 Wall mounting bracket
0008 Control flap

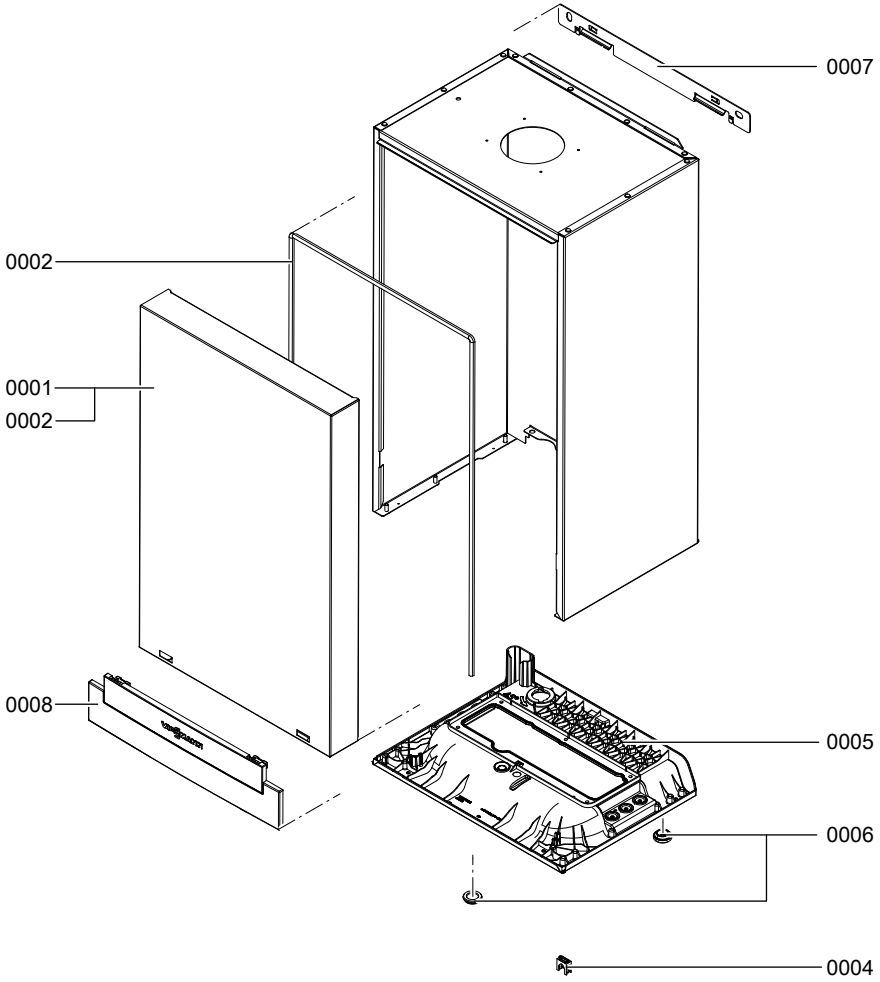

5609 059 GB

Heat cell assembly

0001 Gasket DN 60
0002 Boiler flue connection
0003 Boiler flue connection plug
0004 Flue gas gasket
0005 Flue gas temperature sensor
0006 Heat exchanger
0007 Condensate hose
0008 Siphon
0009 Tee
0010 Gas pipe
0011 Gasket 17 x 24 x 2 (set)
0012 Burner
0013 Thermal insulation block
0014 Heat exchanger mounting (set)
0015 O-ring gasket set 20.6 x 2.6
0016 Condensate hose 400 mm long

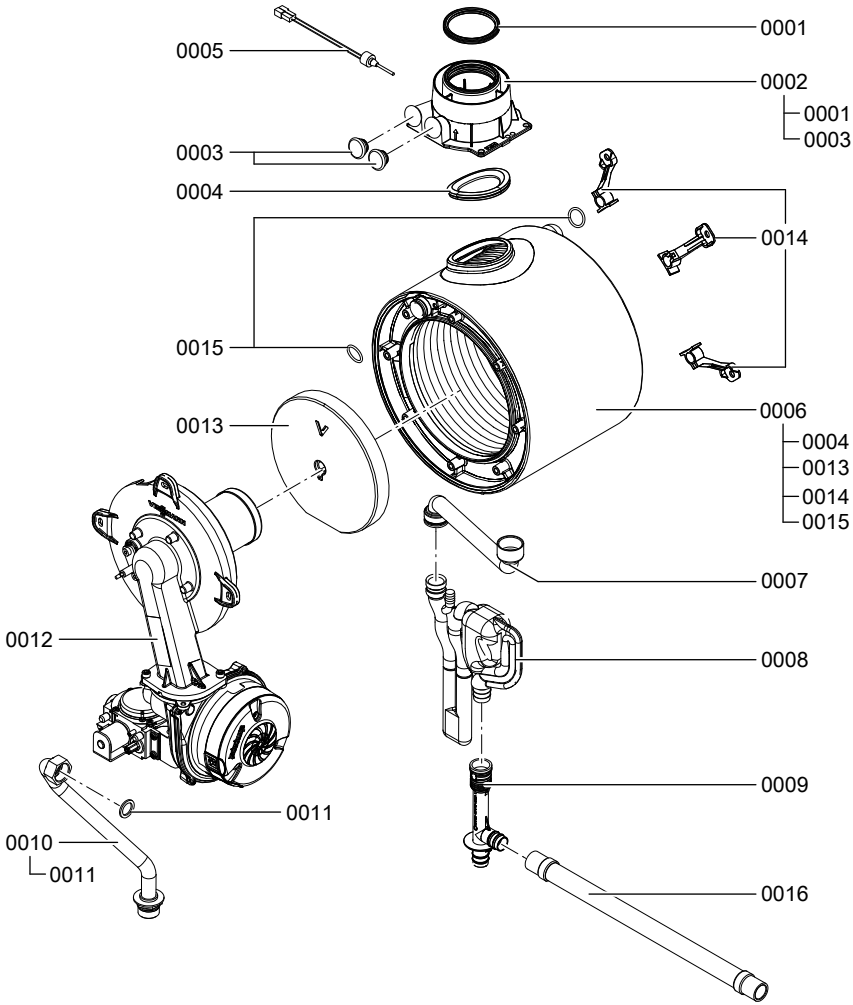

5609 059 GB

Burner assembly

0001 Burner gasket
0002 Thermal insulation ring
0003 Cylinder burner gauze assembly
0004 Burner gauze assembly gasket
0005 Burner door
0006 Ionisation electrode gasket
0007 Ignition and ionisation electrode
0008 Burner door flange gasket
0009 Radial fan
0010 Gas valve
0012 Venturi extension
0013 Gasket A 17 x 24 x 2 (set)
0014 Conversion kit G31
0015 Gasket set G27 (not GB)
0016 Conversion kit G2.350/G27 (not GB)

Burner assembly (cont.)

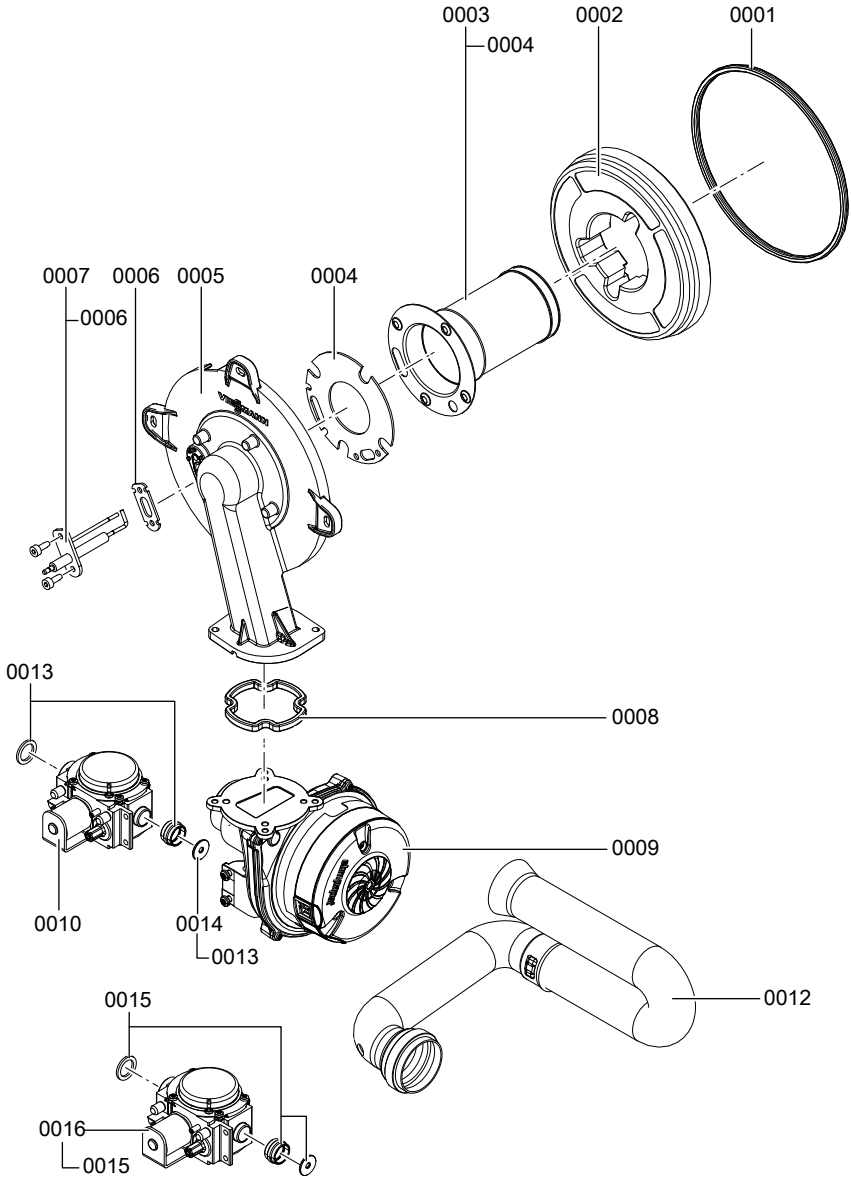

5609 059 GB

Service

Hydraulic assembly

0001 Diaphragm expansion vessel
0002 Support block, diaphragm expansion vessel
0003 Gasket A 10 x 15 x 1.5 (set)
0004 Connection line; diaphragm expansion vessel
0005 Heating water return connection elbow
0006 Moulded hose heating water return
0007 Hose clip DN 25
0008 Clip Ø 10 (5 pce)
0009 Clip Ø 8 (5 pce)
0010 O-ring gasket set 20.6 x 2.6
0011 Air vent valve G ⅜
0012 Temperature sensor
0013 Round sealing ring 8 x 2
0014 Moulded hose heating water flow
0015 Clip Ø 18 (5 pce)
0016 O-ring 17 x 4 (5 pce)
0017 Pressure gauge
0018 Clip Ø 8 (5 pce)
0019 Hose connector adaptor
0020 Thermal circuit breaker
0021 Heating water flow connection elbow
0022 Hydraulics

Hydraulic assembly (cont.)

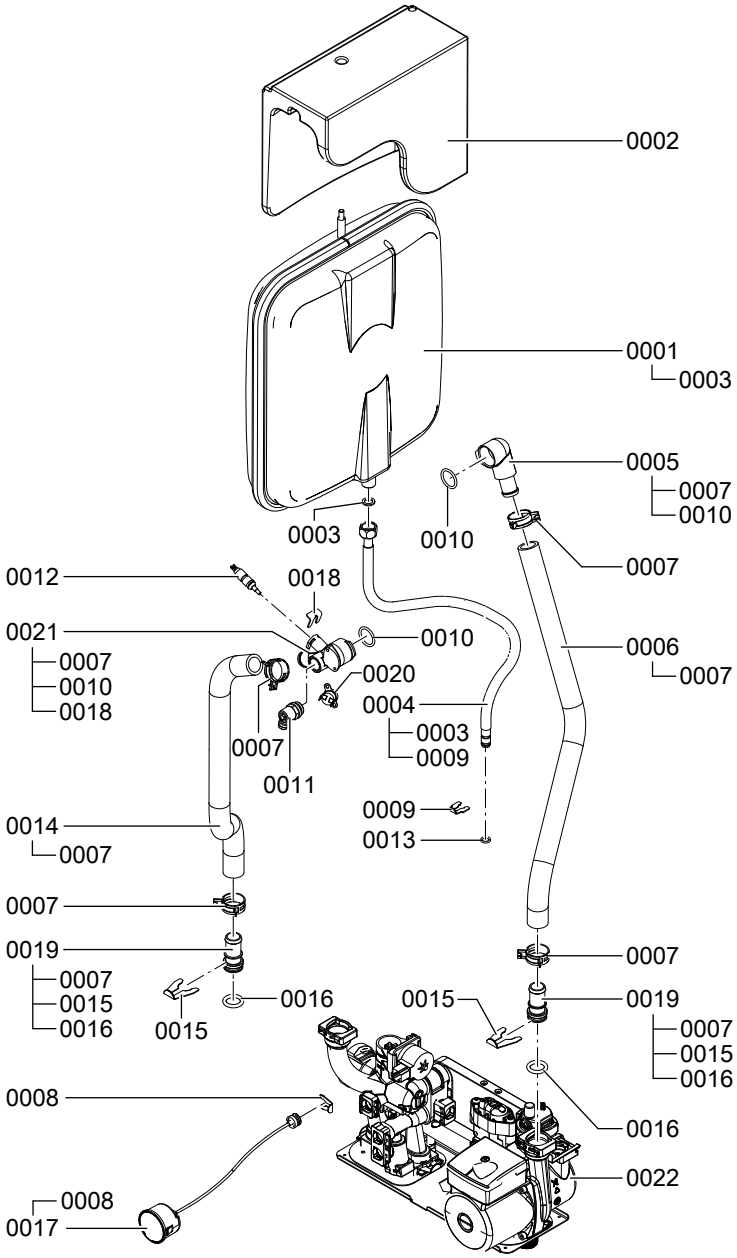

5609 059 GB

Service

System boiler hydraulic assembly

0001 Air vent valve
0002 O-ring 34 x 3 (5 pce)
0004 Gasket set, plate heat exchanger
0005 Safety valve 3 bar
0007 Special safety valve clip (5 pce)
0008 Pump motor
0009 Bypass cartridge
0012 Clip Ø 16 (5 pce)
0014 Stepper motor adaptor
0015 Linear stepper motor
0016 Oval cap seal (5 pce)
0020 Hydraulics
0021 O-ring 19.8 x 3.6 (5 pce)
0022 O-ring 16 x 3 (5 pce)
0023 Check valve
0026 Clip Ø 18 (5 pce)
0031 O-ring 17 x 4 (5 pce)

System boiler hydraulic assembly (cont.)

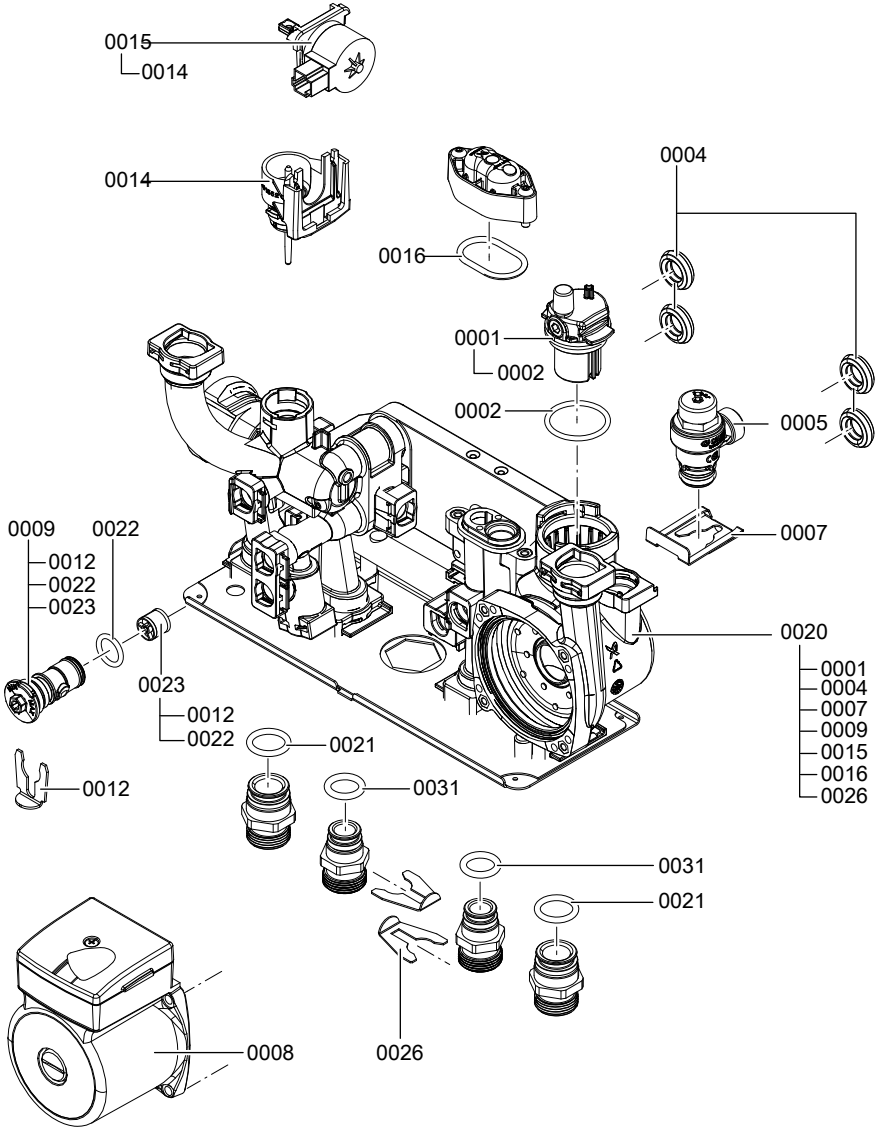

Combi hydraulic assembly

0001 Air vent valve
0002 O-ring 34 x 3 (5 pce)
0003 Plate heat exchanger
0004 Gasket set, plate heat exchanger
0005 Safety valve
0006 Clip Ø 8 (5 pce)
0007 Safety valve clip (5 pce)
0008 Pump motor
0009 Bypass cartridge
0010 Flow sensor
0011 Clip Ø 10 (5 pce)
0012 Clip Ø 16 (5 pce)
0014 Stepper motor adaptor
0015 Linear stepper motor
0016 Oval cap seal (5 pce)
0017 Water volume controller
0018 Temperature sensor
0020 Hydraulics
0021 O-ring 19.8 x 3.6 (5 pce)
0022 O-ring 16 x 3 (5 pce)
0023 Check valve
0026 Clip Ø 18 (5 pce)
0027 O-ring 9.6 x 2.4 (5 pce)
0029 Expansion tank
0031 O-ring 17 x 4 (5 pce)

Combi hydraulic assembly (cont.)

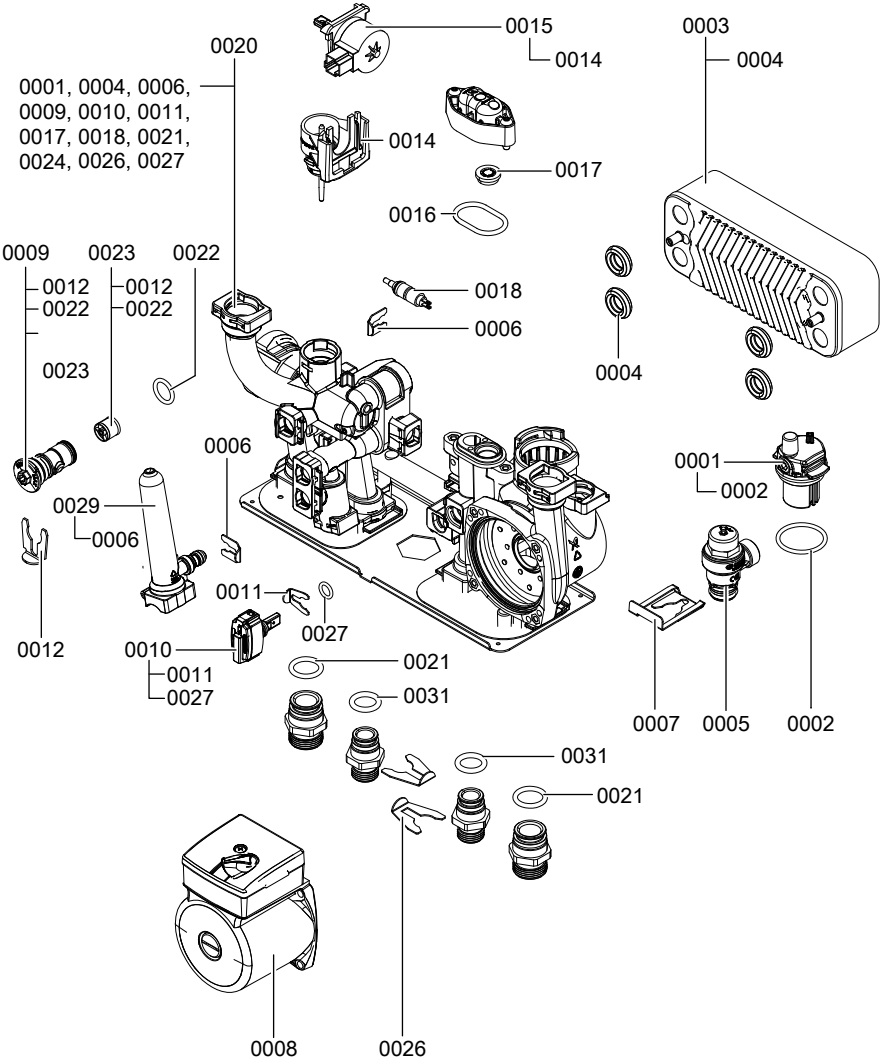

Control unit assembly

0001	Cover, wiring chamber	0003	Profiled seal
0002	Clip hinge	0004	Control unit

Control unit assembly (cont.)

0005 Cable harness X20
0006 Ignition cable with angled plug 5 kΩ
0007 Gas valve cable
0008 Fan connecting cable
0009 Cable harness stepper motor
0010 Fuse 2.5 A (slow) 250 V

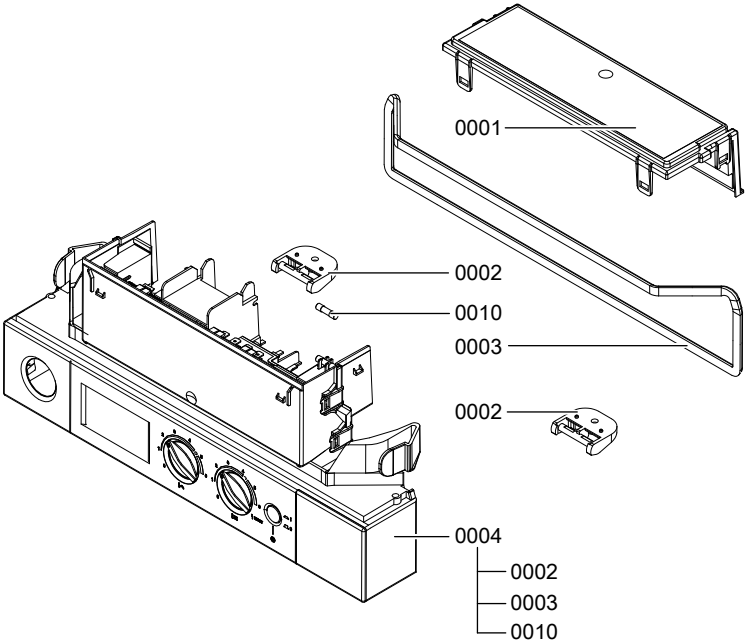

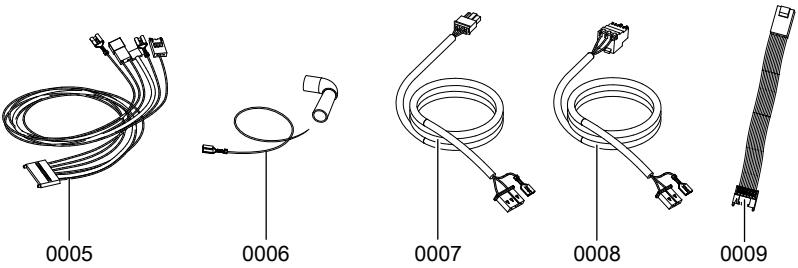

5609 059 GB

Miscellaneous assembly

0001 Spray paint, Vitowhite
0002 Touch-up paint stick, Vitowhite
0003 Special grease
0004 Operating instructions
0005 Installation and service instructions

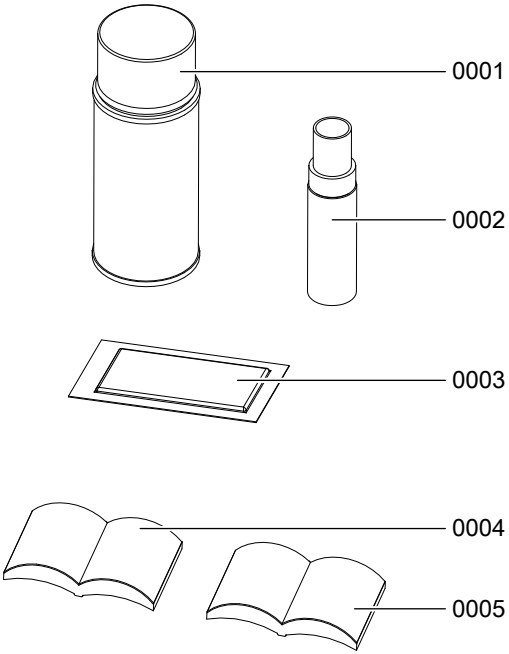

Specification

Rated voltage:	230 V~	Temperature limiter setting:	100 °C (fixed)
Rated frequency:	50 Hz		
Rated current:	2.0 A~	Backup fuse (power supply):	3 A
Safety category:	I		
IP rating:	IP X4 to EN 60529		

Permissible ambient temperature
- during operation: 0 to +40 °C
- during storage and transport: -20 to +65 °C

Gas boiler, category II $_{2H3P}$

Rated heating output range in heating mode					
T_V/T_R 50/30 °C	**kW**	**6.5 – 19**	**6.5 – 26**	**8.8 – 30**	**8.8 – 35**
T_V/T_R 80/60 °C	**kW**	**5.9 – 17.3**	**5.9 – 23.7**	**8.0 – 27.3**	**8.0 – 31.9**
Rated heating output range for DHW heating (gas condensing combi boiler)	kW	—	5.9 – 26.0	8.0 – 30.0	8.0 – 35.0
Rated heat input range	kW	6.1 – 17.8	6.1 – 27.1	8.2 – 31.3	8.2 – 36.5
Connection values *1 relative to the max. load with:					
- Natural gas E	m^3/h	1.9	2.6	3.0	3.5
- LPG P	kg/h	1.4	1.9	2.2	2.6
Power consumption (max.)					
- Gas condensing boiler	W	102	107	106	154
- Gas condensing combi boiler	W	—	119	132	158
Gas condensing combi boiler (DHW heating) Permiss. operating pressure	bar	—	10	10	10

*1 *The connection values are only for documentation purposes (e.g. in the gas contract application) or to estimate a supplementary volumetric settings check. Due to the factory settings, the gas pressure must not be altered from these values. Reference: 15 °C, 1013 mbar.*

Specification (cont.)

Rated heating output range in heating mode					
T_V/T_R 50/30 °C	**kW**	**6.5 – 19**	**6.5 – 26**	**8.8 – 30**	**8.8 – 35**
T_V/T_R 80/60 °C	**kW**	**5.9 – 17.3**	**5.9 – 23.7**	**8.0 – 27.3**	**8.0 – 31.9**
Min. operating pressure, cold water	bar	—	1	1	1
Rated water volume at ΔT 35 K (to EN 13203)	l/min	—	10.6	12.3	14.3
Set flow rate (max.)	l/min	—	10.0	12.0	14.0
Min. DHW flow rate	l/min	—	2	2	2
Product ID		CE-0085BT0029			

Declaration of conformity

Declaration of Conformity for the Vitodens 100-W

We, Viessmann Werke GmbH&Co KG, D-35107 Allendorf, confirm as sole responsible body that the product **Vitodens 100-W** complies with the following standards:

EN 297
EN 483
EN 625
EN 677
EN 806
EN 12 897
EN 55 014-1
EN 55 014-2
EN 60 335-1
EN 60 335-2-102
EN 61 000-3-2
EN 61 000-3-3
EN 62 233

In accordance with the following Directives, this product is designated with **CE-0085**:

92/42/EEC
2004/108/EC
2006/95/EC
2009/142/EC

This product complies with the requirements of the Efficiency Directive (92/42/EEC) for **condensing boilers**.

Allendorf, 1 January 2012

Viessmann Werke GmbH&Co KG

Authorised signatory Manfred Sommer

5609 059 GB

Keyword index

B
Boiler water temperature sensor 53
Burner gasket.....39
Burner gauze assembly.....39
Burner installation.....42
Burner removal.....38

C
Cleaning the combustion chamber….41
Cleaning the heat exchanger.....41
Commissioning.....26
Condensate.....16
Condensate drain.....16, 41
Connection diagram.....64
Connections.....13
Connections on the water side.....13
Cylinder temperature sensor 54

D
Declaration of conformity.....82

E
Electrical connections.....19

F
Fault code.....47
Fault messages.....47
Filling function.....26
Filling the system.....26, 27
Flow limiter.....58
Flue gas temperature sensor.....57
Flue pipe.....17
Frost limit.....63
Frost protection.....63
Function sequence.....46
Fuse.....60

G
Gas connection.....14
Gas supply pressure.....30
Gas train 30
Gas type conversion.....61
■ LPG.....29
■ Natural gas.....61

H
Heating curve.....63

I
Ignition.....40
Ignition electrode.....40
Ionisation electrode.....40

M
Max. heating output.....32

O
Opening the control unit.....18
Outlet temperature sensor.....56
Output matching
■ Flue pipe length.....31
Outside temperature sensor 51

P
Plate heat exchanger.....60
Power supply.....23
Pump stage 2.....34

R
Reducing the heating output.....32
Reset.....50

S
Safety chain 55
Safety valve.....16
Siphon.....17, 41
Specification 80
Static pressure.....30
Supply pressure.....30
System pressure.....27

Keyword index (cont.)

T
Temperature limiter.....55
Troubleshooting.....51

V
Ventilation air pipe.....17
Venting.....28

W
Wall mounting.....10
Weather-compensated mode.....63

Applicability

Serial No.:

7499423	7499424	7499425	7499426
7499427	7499428	7499429	

Viessmann Werke GmbH&Co KG
D-35107 Allendorf
Telephone: +49 6452 70-0
Fax: +49 6452 70-2780
www.viessmann.com

Viessmann Limited
Hortonwood 30, Telford
Shropshire, TF1 7YP, GB
Telephone: +44 1952 675000
Fax: +44 1952 675040
E-mail: info-uk@viessmann.com

5609 059 GB Subject to technical modifications.